COMPUTER AIDED DESIGN AND STRUCTURAL ANALYSIS OF PRESSURE VESSELS

A THESIS SUBMITTED TO
THE GRADUATE SCHOOL OF NATURAL AND APPLIED SCIENCES
OF
MIDDLE EAST TECHNICAL UNIVERSITY

BY

MURAT KANDAZ

IN PARTIAL FULFILLMENT OF THE REQUIREMENTS
FOR
THE DEGREE OF MASTER OF SCIENCE
IN
MECHANICAL ENGINEERING

MAY 2006

Approval of the Graduate School of Natural and Applied Sciences

Prof. Dr. Canan Özgen
Director

I certify that this thesis satisfies all the requirements as a thesis for the degree of Master of Science.

Prof. Dr. Kemal İder
Head of Department

This is to certify that we have read this thesis and that in our opinion it is fully adequate, in scope and quality, as a thesis for the degree of Master of Science.

Prof. Dr. Levend Parnas
Supervisor

Examining Committee Members (first name belongs to the chairperson of the jury and the second name belongs to supervisor)

Prof. Dr. Kahraman Albayrak	(METU, ME)	
Prof. Dr. Levend Parnas	(METU, ME)	
Prof. Dr. M. A. Sahir Arıkan	(METU, ME)	
Asst. Prof. Dr. Serkan Dağ	(METU, ME)	
Fikret Şenel, M.S.	(Barış Elektrik)	

I hereby declare that all information in this document has been obtained and presented in accordance with academic rules and ethical conduct. I also declare that, as required by these rules and conduct, I have fully cited and referenced all material and results that are not original to this work.

Name, Last Name: Murat Kandaz

Signature :

ABSTRACT

COMPUTER AIDED DESIGN AND STRUCTURAL ANALYSIS OF PRESSURE VESSELS

Kandaz, Murat
M.Sc., Department of Mechanical Engineering
Supervisor: Prof. Dr. Levend Parnas

May 2006, 158 pages

This study is conducted for the design and analysis of pressure vessels and associated pressurized equipment using various codes and methods. A computer software is developed as the main outcome of this study, which provides a quick and comprehensive analysis by using various methods utilized in codes and standards together with theoretical and empirical methods which are widely accepted throughout the world.

Pressure vessels are analyzed using ASME Boiler and Pressure Vessel Code, whereas auxiliary codes, especially ASCE and AISC codes are utilized for structural analyses of these equipment. Effect of wind, seismic, and other types of loadings are also taken into consideration in detail, with dynamic analyses. Support structures and their auxiliary components are also items of analysis.

Apart from pressure vessels, many pressurized process equipments that are commonly used in the industy are also included in the scope of the study. They include safety

valves which are an integral part of those kinds of pressurized or enclosed systems, two of the heat exchanger components with great importance -tubesheets and expansion joints-, and API 650 tanks for oil or water storage.

The computer software called as VESSELAID is written in Microsoft Visual Basic 6.0 using SI units. Design and analysis methods of VESSELAID are based on various code rules, recommended design practices and alternative approaches.

Keywords: Pressure Vessel Design, Pressurized Equipment, API 650 Tanks, Vessel Supports, Wind Loads, Seismic Loads, Safety Valves, Heat Exchanger Components

ÖZ

BASINÇLI KAPLARIN BİLGİSAYAR DESTEKLİ TASARIMI VE YAPISAL ANALİZİ

Kandaz, Murat
Yüksek Lisans, Makina Mühendisliği Bölümü
Tez Yöneticisi: Prof. Dr. Levend Parnas

Mayıs 2006, 158 sayfa

Bu çalışma, basınçlı kap ve ilgili basınçlı ekipmanların, çeşitli standart ve yöntemlerle tasarlanması ve analiz edilmesi ile ilgilidir. Bu çalışmanın ana çıktısı olarak, bu metodlarla hızlı ve kapsamlı çözümlemeler yapabilen bir bilgisayar programı geliştirilmiştir.

Basınçlı kaplar, ABD'deki makina mühendislerinin bir kuruluşu olan ASME'nin Kazan ve Basınçlı Kap Standardı ile analiz edilmekte olup, ABD İnşaat Mühendisleri Odası ve ve ABD Çelik Konstrüksiyon Enstitüsü başta olmak üzere çeşitli kurumların standartları da bu tür ekipmanların yapısal analizinde kullanılmaktadır. Rüzgar, deprem, ve diğer tip yüklemelerin etkisi de, dinamik analizlerle beraber, ayrıntılı olarak irdelenmiştir. Mesnet yapıları ve bunların yardımcı parçaları da analiz edilen yapısal elemanlar arasındadır.

Basınçlı kaplar dışında, sanayide geniş olarak kullanılan birçok proses ekipmanı da bu çalışmanın kapsamı içerisindedir. Bunlar, bütün basınçlı ve kapalı sistemlerde

bulunması gereken güvenlik vanaları, önemi göz önünde bulundurulduğunda hakkındaki bilgisayar destekli çalışmalar sınırlı olan iki tip eşanjör elemanları – serpantin tutucu plakalar ve genleşme parçaları-, ve petrol veya su depolamak için kullanılan API 650 tanklarıdır.

VESSELAID adındaki bilgisayar programı, Microsoft Visual Basic 6.0 kullanılarak, SI birimlerle yazılmıştır. VESSELAID'in tasarım ve analiz yöntemleri için, çeşitli standartların getirdiği kurallar, sık kullanılan ve önerilen tasarım metodları, ve değişik yaklaşımlar temel alınmıştır.

Anahtar kelimeler: Basınçlı Kaplar, Basınçlı Ekipmanlar, API 650 Tankları, Basınçlı Kap Mesnetleri, Rüzgar Yükleri, Deprem Yükleri, Güvenlik Vanaları, Eşanjör Elemanları

To my parents,
my dear mother Neriman and my dear father Atıl

ACKNOWLEDGEMENTS

I would like to express my thanks to my thesis supervisor, Prof. Dr. Levend Parnas, for his guidance and attention, for all throughout the thesis period, which kept me in rapid progress, and his wise advices that directed me towards a well-defined objective.

I also thank to my friends and colleagues, especially to Ms. Pınar Kasımoğlu and Mr. Ural Uluer, whose accompaniment to me meant really a lot.

My gratitudes to Mr. Fikret Uslu, who had supported me in my thesis study and in my professional life for over two years, and who had been the greatest boss by his tolerance and sharing his knowledge and experiences.

My deepest gratefulness are for my parents for their belief, education, and encouragement, which enlightened me all throughout my life. They have set inspiring life stories for me with the paths they walk.

TABLE OF CONTENTS

NOMENCLATURE

The nomenclature used within the thesis is given below.

A_B = Bolt area

A_{CS} = Effective cross sectional area of vessel

A_{CV} = Total surface area of the vessel or container, [m^2]

A_{RC} = Required roof-to-shell junction area for an API 650 cone roof

A_{RD} = Required roof-to-shell junction area for an API 650 dome roof

A_{RS} = Roof-to-shell area juction area for API 650 tanks

A_S = Steel area replacing required bolt area

A_{SR} = Stiffener ring cross sectional area

A_{TS} = Area of tubesheet within outer tube perimeter

A_O = Exact required orifice area, [cm^2]

A_{WV} = Wetted surface area of vessel [m^2]

A_1 = Bearing plate area

A_2 = Concrete cover area over bearing plate

B = External pressure factor found in ASME-VIII, Div 1.

C = Structure period response factor for seismic analysis

C_C = Critical damping factor

C_{CO} = Coefficient determined by wind exposure category

C_E = Seismic coefficient

C_F = Force coefficient

C_{FE} = Environmental Fire Exposure Coefficient

C_H = Average horizontal dimension of the vessel normal to the wind

C_{IF} = Occupancy importance factor

C_{LE} = Liquid expansion coefficient, [$1/^oC$] or [vol/vol ^oC]

C_O = perimeter of outer tubes

C_S = Damping factor, i.e. vessel stiffness in vertical direction

C_{SC} = Service coefficient

C_{SF} = Coefficient of sub-critical flow

C_{SH} = Specific heat, [kJ/kg ^{o}C]

C_{SS} = Structure size factor

C_{HR} = Coefficient which is a function of specific heat ratio

C_{SI} = Site structure interaction factor

C_{TS} = Factor which is taken as 1.25 for simply supported plate, and as 1.0 for fixed plate tubesheets

$C1$ = constant parameter that varies with the support type of plates, i.e. whether fixed or simply supported

C_2 = constant which TEMA assumes as 0.77

d_{BR} = Base plate distance to outer ring

d_H = Distance between head-to-shell junction and saddle centroid

d_P = Distance perpendicular to gusset angle, which carries the compressive force on gusset, which together with gusset thickness determines the relative bearing area

d_{SP} = Distance from the shell to the support point of lugs

d_1 = Distance between skirt neutral axis and tensile force

d_2 = Distance between skirt neutral axis and compressive force

D_B = Bolt circle diameter

D_C = Diameter of the circle of the support points for lugs, i.e. $2(d_{SP} + R_M)$

D_{IB} = Inside diameter of base ring

D_i = Inside diameter of vessel

D_{IT} = Inner diameter of API 650 tank

D_M = Mean diameter of vessel

D_{MT} = Mean diameter of API 650 tank

D_O = Outside diameter of vessel

D_{OB}= Outside diameter of base ring

D_{OT} = Outer diameter of API 650 tank

D_{SK} = Mean diameter of skirt

D_{TS} = Diameter of tubesheet

D_{BS} = diameter of bellow shell

D_{OD} = outer diameter of tube

DMF = Dynamic magnification factor

E = Elastic modulus in any respect

E_L = Longitudinal joint efficiency for shells

E_H = Joint efficiency for heads

E_C = Circumferential joint efficiency for shells

E_S = Elastic modulus of shell material

E_{SP} = Elastic modulus of saddle plate material

E_B = Modulus of elasticity for bellow material

E_R = Elastic modulus of roof material

E_{SK} = Joint efficiency for skirt weld to shell

E_{SR} = Elastic modulus of stiffener material

f_{CC} = Compressive strength of concrete

f_R = Natural frequency of vessel

f_V = Vortex shedding frequency

f_W = Allowable weld unit force

F_B = Maximum bolt load

F_C = Horizontal force at the roof-to-shell junction for an API 650 cone roof

F_D = Horizontal force at the roof-to-shell junction for an API 650 dome roof

F_H = Shearing force at the top of the support leg column

F_{HC} = Horizontal force in the plane of the cross-bracing induced by shear force

F_i = Initial bolt load due to pre-tightening

F_L = Force on one support leg

F_{LU} = maximum force on one lug

F_P = Total force for a bellow introduced by pressure

F_R = Radial force on the shell induced by shear force

F_S = Shear force applied at the vessel base

F_T = Concentrated seismic force

F_{TB} = Maximum tensile force on bolt circumference

F_W = Wind force

F_X = Maximum linear seismic force

FS = Factor of safety

FS_B = Factor of safety for modifying bearing strength

G = Specific gravity of fluid inside vessel or tank

G_F = Gust factor

H = Liquid height in a cylindrical shell

h_{FE} = Length of flanged & dished / elliptical head

h_T = Tangent-to-tangent length of vessel

h_U = Height of upper shell course in an API 650 tank

h_V = Total vessel length

h_1 = Height of first shell course in an API 650 tank

I_L = Moment of inertia of leg cross section

I_M = Moment of inertia of shell cross section

j_1 = Ratio of distance between compressive and tensile forces and bolt circle diameter

j_2 = Ratio of distance between compressive and vertical force and bolt circle diameter

k = Specific heat ratio, i.e. C_p/C_v

k_C = Concrete reinforcement coefficient depending upon foundation cover

k_{VS} = Vessel stiffness

K_B = Capacity correction factor with respect to backpressure in gas/vapor systems

K_{ST} = Structure type coefficient

K_Z = Velocity pressure coefficient

K_M = Coefficient of discharge which can be obtained from the valve manufacturer

K_P = Capacity correction factor with respect to overpressure

K_{SH} = Correction factor for superheated steam

K_T = ratio of thicknesses of lower shell and upper shell course, i.e. t_L / t_U

K_V = Capacitiy correction factor with respect to viscosity

K_W = Capacity correction factor with respect to backpressure

K_Z = Velocity pressure coefficient

K_1 = factor defined in VESSELAID for bellow longitudinal bending stress

K_2 = factor defined in VESSELAID for bellow longitudinal membrane stress

K_3 = factor defined in VESSELAID for bellow longitudinal bending stress

L_{AP} = Length of annular plate

L_{DS} = Minimum distance between stiffeners

L_H = Length of heads

L_L = Weld strength on the leeward side

L_{LN} = Net lug length, i.e. vertical length of gusset, not considering thicknesses of top bar and baseplate

L_{LU} = Lug length

L_{NG} = Lug dimension normal to gusset direction

L_O = Largest dimension of a skirt opening

L_S = Spacing between stiffeners, if required for a cylindrical shell

L_{SN} = Saddle plate length normal to vertical axis of stiffener or web plate

L_T = Distance between tubes

L_{VS} = Length of vertical stiffener

L_W = Weld strength on the windward side

M = Total moment

M_S = Seismic moment on vessel

M_P = Piping moment on vessel, [Nm]

MW = Molecular mass of gas / vapor

n_L = Design life of the vessel, [year]

N_{BA} = Number of bolts in skirt anchor chair

N_{BL} = Number of bolts per support leg

N_L = Number of support legs

N_{LU} = Number of lugs used

N_S = Number of stiffening rings per saddle

N_ϕ = In-plane force at the roof plate

NPS = Nominal pipe size [inch]

O_S = Opening in skirt, equal to sum of wrench diameter and clearance

p_b = Bearing pressure

P = Internal pressure

P_A = Annual probability of exceeding wind speed

P_C = Dead load (weight) and live load (snow) acting on a cone roof [force / area]

P_{CF} = Critical pressure in gas and vapor systems

P_{CR} = Critical pressure for buckling of cylindrical shells

P_D = Dead load (weight) and live load (snow) acting on a dome roof [force / area]

P_F = Failure pressure in case of a frangible joint [mm water column]

P_{HE} = Applied pressure in a heat exchanger

P_{IO} = Internal pressure at operating conditions

P_{IT} = Internal pressure at test conditions

P_L = Load on leg

P_P = Probability of exceeding design wind speed

P_W = Wind Pressure

P_1 = Upstream pressure, i.e. the set pressure plus the allowable overpressure plus atmospheric pressure, [kPa]

P_2 = Downstream pressure, [kPa]

q_{CD} = Convolution depth for a bellow

q_{CP} = Convolution pitch for a bellow

q_z = Effective wind pressure, [Pa]

Q = Load per saddle

Q_A = Minimum required air discharge capacity, [m^3/h]

Q_C = First moment of area of column cross section

Q_H = Heat input, [W]

Q_M = Mass flow rate, [kg/h]

Q_V = Volumetric flow rate at standard conditions, [m^3/h]

r_d = Radial distance from center of cylindrical shell to any point

r_g = radius of gyration of the stiffener

r_P = Ratio of downstream pressure to upstream pressure, P_2/P_1

R_C = Crown inner radius for flanged and dished head

R_{DR} = Dome roof maximum construction radius

R_i = Inner radius of vessel or tank

R_K = Knuckle radius for flanged and dished head

R_{LC} = Leg circle radius

R_M = Mean radius of the vessel, i.e. main shell

R_O = Outside radius

R_{PP} = Perforated plate radius for tubesheet, i.e. radius measured from the center of the innermost tube hole

R_{TS} = Tubesheet radius

S = Allowable stress in any respect

S_{AB} = Allowable tensile stress of bolt material

S_B = Allowable bending stress

S_{BC} = Allowable bearing strength

S_{BC}' = Allowable bearing strength based on ACI formula

S_{BP} = Allowable bending stress of base plate material

S_{BS} = Allowable bending stress of top stiffener material

S_C = Allowable compressive strength

S_{CG} = Maximum compressive stress on gusset

S_{GC} = Allowable stress for gusset in compression

S_S = Allowable stress in shell

S_{SH} = Allowable shear stress

S_{SK} = Allowable stress of skirt material

S_{STS} = Allowable shear stress for tubesheet material

S_T = Allowable tensile stress

S_{TR} = Allowable tensile stress for roof material

S_{TRS} = Allowable tensile stress for roof-to-shell junction material

S_{TS} = Allowable stress for tubesheet material

S_{YR} =Yield strength of stiffening ring material

S_{YP} = Yield strength of saddle plate material

S_Y = Yield strength in a general context

T_1 = Gas temperature at upstream pressure, [^{o}K]

t_{AP} = Annular plate thickness

t_B = Bellow thickness

t_{BP} = Base plate thickness

t_{BR} = Bearing plate thickness

t_{CR} = Cone roof thickness

t_{CS} = Shear thickness of the column cross section

t_{DR} = Dome roof thickness

t_{FE} = Flanged & dished / elliptical head thickness

t_G = Minimum required gusset thickness

t_{HS} = Hemispherical head thickness

t_L = Thickness of upper shell in an API 650 tank

t_{RT} = Roof thickness

t_S = Shell thickness

t_{SB} = Thickness of steel replacing bolts

t_{SK} = Thickness of skirt

t_{SP} = Saddle plate thickness

t_{SR} = Stiffening ring thickness

t_{TB} = Minimum required top bar thickness

t_{TO} = Thickness of top stiffening ring

t_{TS} = Tubesheet thickness

t_U = Thickness of upper shell in an API 650 tank

t_V = Thickness of vertical stiffener

t_1 = Thickness first shell course in an API 650 tank

t_2 = Thickness of second shell course in an API 650 tank

t_3 = Thickness of third shell course in an API 650 tank

T_E = Exposure factor evaluated at 2/3 of the vessel height

T_V = Fundamental period of vibration

T_S = Characteristic site period

V_O = Resonance wind velocity for ovaling

V_W = Wind speed

V_{WB} = Basic wind speed

w_{BP} = Base plate width

w_L = Lug width

w_S = Width of concrete / steel support on which lug is present, i.e. $2(w_{BP} - d_{SP})$

w_{TS} = Top stiffener width

w_{WP} = Web plate width

W_O = Vessel weight in operating conditions

W_{RT} = Weight of roof

W_{ST} = Weight of shell

W_T = Vessel weight in test conditions

z_G = Coefficient determined by wind exposure category

Z = Compressibility factor at flow conditions

Z_R = Ring section modulus

Z_{RS} = Ratio of stiffener ring moment of inertia to effective flange dimension, c or d depending on ring location

Z_S = Seismic zone factor

Z_{SS} = Section modulus of stiffener

α = Coefficient determined by wind exposure category

α_G = Gusset angle

α_{XU} = Angle between directions of F_R and F_{HC} ($90^o - 180/N_L$ in [degrees])

β = Structural damping coefficient

δ = Deflection in any respect

δ_B = Longitudinal deflection of bellow

ϕ = Bearing strength factor

η = Ligament efficiency of perforated tubesheet, i.e. $(L_T - D_{OD}) / D_{OD}$

σ_{AB} = Combined stress in between supports for a stiffened shell

σ_{AS} = Combined stress at supports for a stiffened shell

σ_B = Bending stress in the vessel shell

$\sigma_{B,CR}$ = Buckling stress in saddle plate

σ_{BP} = Stress in the base plate

σ_C = Maximum pressure on the bolt contact area

σ_C' = Allowable bearing strength

σ_{CO} = Compressive stress

σ_{CR} = Maximum stress in saddle plate

σ_{CS} = Combined stress in the shell for a non-stiffened shell

σ_{ET} = Equivalent stress in tubesheet plate

σ_{GC} = Compressive stress along gusset

σ_H = Hoop stress

σ_L = Longitudinal stress

σ_P = Tangential shell stress due internal pressure, i.e. $PR_M / 2t_s$

σ_T = Tangential stress

σ_{YAP} = Yield strength for annular plate material

σ_1 = Longitudinal bending stress at saddle

σ_2 = Longitudinal bending stress at mid-span between saddle

$\sigma_3, \sigma_4, \sigma_5, \sigma_6$ = Tangential shear stresses at sell for various saddle types

σ_7 = Circumferential compressive stress induced by saddles

σ_8 = Additional stress in the head when used as a stiffener

σ_9 = Ring compressive stress in shell over saddle

σ_{10} = Stress in the stiffener ring over saddle

σ_{1B} = Bellow membrane hoop stress

σ_{2B} = Bellow longitudinal membrane stress

σ_{3B} = Bellow longitudinal bending stress

σ_{4B} = Bellow longitudinal membrane stress

σ_{5B} = Bellow longitudinal bending stress

θ_L = Half of the angle between lugs

θ_{RT} = Angle between horizontal and roof at roof-to-shell junction

θ_S = Angle of contact of saddles with the shell

γ = Specific gravity of API 650 tank roof

ν = Poisson's ratio

ABREVIATIONS

Various abbreviations regarding associations, societies, institutions and their standards and codes referred throughout this thesis are given below.

AISC: American Institute of Steel Construction
ANSI: American National Standards Institute
API: American Petroleum Institute
API RP 521: API Guide, Guide for Pressure Relieving and Depressurizing Systems
API 650: API Code, Welded Steel Tanks for Oil Storage
ASCE: American Society of Civil Engineers
ASME: American Society of Mechanical Engineers
ASME-I: ASME Code, Section I; Power Boilers
ASME-II: ASME Code, Section II; Materials
ASME-VIII Div. 1: ASME Code, Section VIII, Division 1, Pressure Vessels
ASME-VIII Div. 2: ASME Code, Section VIII, Division 2, Alternative Rules for Pressure Vessels
AWWA: American Water Works Association
AWWA D100: AWWA Code, Welded Steel Tanks for Water Storage
GPSA: Gas Processors Suppliers Association of America
LPG: Liquid petroleum gas
MAOP: Maximum allowable operating pressure
NFPA: National Fire Protection Association of America
TEMA: Tubular Exchanger Manufacturers Association
UBC: Uniform Building Code

LIST OF FIGURES

LIST OF TABLES

CHAPTER 1:

INTRODUCTION

1.1 – GENERAL

Pressure vessels and in a general context, pressurized equipment have been increasingly utilized in the last few decades more than ever. From burners in household applications to LPG tanks used in regular automobiles, from boilers and heat exchangers used in industrial applications as well as for heating and cooling purposes in residences, to large storage, transportation, and import / export facilities, these equipments are now a must for the age we live in for humans. This proves the fact that without the developments in pressurized equipments, the current era would have been completely different, especially when the dependency on energy is considered.

The use of pressurized equipment in facilities oriented toward energy industry and also use of them in all industrial and in all modern residential and commercial facilities prove the broadness of application area of them. It is also unfortunately true that a small error in any of design, fabrication, installation, commissioning or operation phases may cause drastic damages to everything surrounding the equipment such as buildings, structures, other equipment, and most critical of all, to human life, environment, or ecology. Explosions and leakage of hazardous material in populated areas are examples that have tragically occurred in the past.

In such a field, the critical responsibility of engineers is to ensure the safety of these equipments, which is a quite burden considering the broadness of areas of usage and the

proximities of these to humans. This requires a great understanding of pressurized equipment for all its phases, from design to operation, and regulations governed by standards, or namely codes, must be obeyed strictly. Alternatives of these regulations are present, some quite accurate and some quite conservative. The choice among these alternatives is usually a matter of experience of the engineer.

After ensuring safety, economical and rapid design is of great importance. Many projects and jobs are being processed every day, and the success in the industry depends on rapid progress as well as reliability. In an era in which time is literally counted in monetary units, and in which the business is dependent on projects that must be completed in limited times, even reputable people and companies may encounter problems regarding time, cost, and performance.

In these respects, computer-aided design (CAD) concept has proven itself in every practice, and also in this business considering major features of pressurized equipment. It must be noted although computer-aided tools are quite helpful; they are not enough by themselves. It is always the engineer's job to understand and implement the computerized results, for safety, ethical and economical reasons.

The computer software developed in this study, called as VESSELAID, is written utilizing the programming software Microsoft Visual Basic 6.0. As well as combining various regulations that must be obeyed at no cost, it also brings alternative approaches that are not dictated as rules, but rather widely-accepted industrial practices that are used within major companies. This approach points out conservative and accurate methods together with correlations, empirical methods, and theoretical methods. According to the level of available information, users can adjust the method to be utilized in some modules, i.e. the results obtained are more conservative with less information than they are with more information.

1.2 – SOFTWARE SCOPE AND PHILOSOPHY

The scope of the VESSELAID can be categorized in two major parts, mainly as:

- Pressure vessels
- Various pressurized equipments

The fundamentals and the most basic part of the pressure vessel design depend on ASME Boiler and Pressure Vessel Code Section VIII, Divison 1 [1], referred as ASME-VIII Div. 1 hereafter. Being the most distinguished code among them in means of development, proven experience, ease of adaptation and implementation, ASME-VIII Div. 1 also constitutes a basis for the development of many codes following it, especially in the USA. The basic design of pressure vessels in VESSELAID include geometric design, i.e. determining thickness, diameter and various other dimensions, determining joint efficiency and selecting material according to inner pressure and static weight of the fluid contained. Division 2 of the same code is also available in VESSELAID for the plastic analysis, i.e. for higher pressures and lower diameter-to-thickness ratios. It must be noted that Division 1 contains more applicable and basic rules, whereas Division 2 is about alternative rules for extreme conditions and more detailed analyses.

Apart from basic design of vessels that are contained in many other pressure vessel softwares in the world today, one advantageous feature of VESSELAID is that it also includes wind and seismic loading analysis, according to ASCE 7-98, Minimum Design Loads for Buildings and Other Structures [2], issued by American Society of Civil Engineers. The implementation and basic understanding of this code is based on [3]. In VESSELAID, piping, grating, and other loads can also be assigned. Grating loads are simply evaluated according to their weight and moment they create, whereas, as piping load evaluation is quite complicated, a method commonly accepted as an industry practice is utilized in VESSELAID, based on [4].

Once the vessel itself and the loads on it are found, load combinations should be checked, which is an item of analysis which is generally skipped causing incomplete analysis results. For instance the vessel itself can withstand individual loads, however, the stability under combinations of those individual loads should also be checked [4]. VESSELAID hence evaluates nine different load combinations and analyses the vessel completely for every type of variation in loading.

The vessel itself, no matter how perfectly designed within, also needs careful analysis of its support structures. The above items (vessel design, loading analyses) are related to the design phase, whereas support analysis act as a link between design and installation. All types of supports currently being used in the industry today are contained in VESSELAID together with all of their auxiliaries, giving the program one of its strongest assets when compared to other programs. Skirts and lugs are based on [4], whereas support legs are based on [3]. Reference [5] is the primary source today for supporting horizontal vessels, even it has been published a long time ago, and practical approach of that is contained in Reference [6]. Manual of American of Steel Construction [7] is also referenced for the allowable stress evaluation under various loadings, for steel materials in support structures.

Together with the above scope, pressure vessels can be designed and analyzed quite extensively already. However, to perform a complete analysis regarding pressurized equipment widely used in the world, some critical utilities are also included. These are:

- Pressure safety devices
- API 650 tanks
- Heat exchanger parts: Tubesheets and bellows

Pressure safety valves must be present in every pressurized or enclosed system regardless of the service, as a requirement of regulations concerning health, safety and environmental (HSE) issues. VESSELAID's scope is based on References [8] and [9] in that manner.

API 650 tanks, although operate in atmospheric conditions and generally not considered as pressure vessels, also have broad application areas for oil and water storage in oil fields, petroleum refineries, import and export facilities, pump stations, facilities requiring any kind of oil, and any facility needing huge firewater systems. As the name indicates, main governing code for the design, manufacturing, installation, testing and commissioning, and operation and maintenance of these are governed by API 650 code, namely Welded Steel Tanks for Oil Storage [10].

Two most critical parts of heat exchangers, tubesheets holding tubes up and bellows installed for stress relieving purposes between tubes, are also quite important elements considering the internal pressures, forces and moments that they withstand. Tubesheet design is based on Standards of Tubular Exchanger Manufacturers Association [11], whereas bellow design is based on [3].

The material database in VESSELAID contains the most commonly used materials in for relative purposes, i.e. material data of forged sheets and plates for pressure vessels, tanks, and support structures, bolting material for anchorage are taken from ASME Boiler and Pressure Vessel Code Section II, Materials [12], referred as ASME-II hereafter. This code includes detailed specifications, product forms (as plate, forging, bolting, seamless / welded pipe, and so on), allowable stresses after various treatment operations (annealing, cold or hot drawing) in temperature ranges. ASME-II is considered as the material database of all sections of the ASME Boiler and Pressure Vessel Code, and is widely used in various practices in which its contents are referred as *ASME materials*.

VESSELAID is designed in a user-friendly manner, and the effect of this approach is best seen in input-output procedures. Users can use all VESSELAID modules independently (each among modules of vessel design, wind loading, seismic loading, additional loading, support analysis, pressure relief device design, API 650 tank design,

tubesheet and bellow analysis), i.e. only required input would be sufficient rather constructing all the data and inputting all the parameters that do not affect the output desired. This ease is a feature that lacks in many softwares, resulting complicated inputs of unnecessary data, and much more complicated and confusing outputs. In other words, users can limit the input data and output results according to their items of design and analysis.

VESSELAID can also generate reports within itself, i.e. errors, design values, and analysis results can be seen in the report. The summary of the quick analyses can also be performed during data input phase.

1.3 – LITERATURE SURVEY

Many studies and works have been performed up to now, considering the broadness of application areas of pressure vessels and pressurized equipment. In a general point of view, Nash and Spence [13] considers the development of pressurized equipment in a cycle such that first a preliminary idea or theoretical work emerges and leads to accidents or failures which also provide better understanding to the subject and hence emergence of codes and standards. The difference between codes and standards, by [14], is that a code is prepared to be adopted by a jurisdiction as law, such as a legal entity or a government establishment; and whereas a standard is not governed under law but however may be referenced by codes. Many codes and standards have emerged upto now, as a result of the progresses described below.

The first development of pressure containing enclosed systems lay back in the times of industrial revolution, when steam had became the major energy source. Throughout this period, steam generators and boilers were utilized to produce mechanical power in ships and trains. Boiler explosions led to the first investigations by national institutes. Franklin Institute of Philadelphia has issued recommendations in 1830, however the first technical publication and study providing the very first rules and regulations in

USA was the Steamboat Act in 1852. Prussian General Industrial Code issued in 1845 in Germany, was the first national code giving technical requirements about boilers. In 1854, Manchester Steam Boiler Assurance Company in Britain was founded, also being the first in their field, to inspect boilers before operation and provide insurance as required or issue non-conformance documents.

The discovery of electricity broadened the usage of boilers drastically, as they are then used to generate electric power. The famous Babcock and Wilcox boilers were produced in this time frame to light up large buildings and facilities. As the boiler industry grew hugely in the second half of 19th century, demand for steam and electricity were the major driving sources.

Polytechnic Club, which later turned into a very reputable company as Hartford Steam Boiler Inspection and Insurance Company (HSBC), was the first inspection and insurance company in USA, and its own rules and guidelines were first issued in 1907 in Massachusetts after two serious explosions in shoe factories. ASME then set up a committee to formulate a specification for boilers and pressure vessels in 1911, which is issued as Section I, Power Boilers. In the following decade, various sections were issued, making the ASME Code the most developed and distinguished code of that time period.

In Britain, rules regarding pressure vessels in means of standardization were issued in 1939, setting up the very first BSI 1500 code, driven by economic concerns. Formerly being much more conservative than the regulations in the USA which decreased export rate, the new BSI code's regulations were quite easy and economically feasible to be implemented. BSI 1500 later developed into BS 5500, which is then substituted by EN 13445 by European Pressure Equipment Directive and used nowadays as guidelines in Britain.

With the discovery of nuclear fission, stations producing commercial electricity were founded first in Britain in late 1960's, followed by the USA, France, Germany, and the former Soviet Union. It can be said that the academic studies on pressure vessels had been increased and the fundamentals of most commonly used analysis methods had been found in that period. The first International Conference on Pressure Vessel Technology was held in 1969 in Delft, which introduced the basic approach of shell theory and *design by analysis* (DbA) method. DbA is an alternative for *design by rule* or *design by formula* (DbF) method that had been commonly used in codes and guides until 1970's. The main difference between those two is that in DbF, specific formulae are utilized to design a pressure vessel; whereas in DbA, the results of stress analysis are compared with the allowable stresses [15]. A detailed DbA approach is provided in ASME Section III, Nuclear Power Plant Components beginning from 1963.

With Leibniz's calculus studies and Love's elasticity theory that have been performed before 20th century, modern analysis methods have increasingly developed. Although most of the codes remain to utilize DbF approach, plasticity theory and fracture mechanics have contributed a lot to the basic understanding of pressure containing vessels. Characterization of stresses by von Mises and Tresca, together with fatigue design methods have donated engineers and scientists with great tools enabling better and more complete DbA approaches.

The *finite element methods* (FEM), first developed for aircraft industry, have provided approximate but quite accurate solutions including elastic, plastic, thermal, buckling, creep, fracture and crack, dynamic and fatigue analyses. Together with computer applications, FEM are now used commonly in industry very widely, not only in solid mechanics problems, but also in every kind of analyses.

One major advantage of computers has become the engineering softwares, having developed and increased in number drastically in the last 20 years and taking their power from the concept of CAD. References [16], [17], [18], [19] and [20] are

examples from the most valuable studies that have been performed previously before VESSELAID and their software programming approaches are used as guidelines in this study. As well as studies like those, numerous softwares have been written by companies based on previous work experience and excellent examples of CAD have also been implemented by engineering software companies. In pressure vessel and pressurized equipment business, Coade and Codeware can be counted as the two most developed engineering software companies. Before proceeding with developing the software in this study, Coade's softwares on pressure vessels, piping, and API 650 tanks and Codeware's software's on pressure vessels, heat exchanger equipments and finite element analyses of nozzles have been investigated to see their capabilities and to integrate common approaches in software programming. After having investigated these and performed various jobs utilizing these softwares in the last two years, the power of those had been better understood as more and more challenging cases are encountered with. Although various errors could be found in them, most of them are trivial. Especially Coade's approach in engineering software, had brought a different insight into computer-aided engineering, e.g. the piping stress analysis software based on ANSI B31 codes has various options regarding the code implementations, alternatives bringing a great amount of flexibility to the user, and so on. It can be said that the philosophy used while developing VESSELAID is inspired by Coade's piping stress analysis software, namely Caesar II.

Together with experimental analyses and lessons learned depending on previous experiences, guidelines issued by reputable companies have also integrated DbA and DbF methods with correlations. Also called as *company standards* or *company guidelines*, these are generally more conservative than codes and regulations as they aim a specific level of quality. Reference [21], also is a reference that helped the author in this study, summarizing the ASME Code providing ease in the implementation.

The current approach towards not only pressurized equipments but also any kind of industrial equipment is *risk based inspection assessment and maintenance*. Most codes

and standards do not consider that equipments degrade during service and deficiencies can be found utilizing *fitness for service* (FFS) methods [22] long before failure. API 579 contains a thorough FFS assessment, which explains the insight of the analysis items such as damage mechanisms, past and future operating conditions, NDE, material properties, environmental effects, stress analysis, FEM results, data analysis, engineering reliability models, and so on. The future development that is thought to affect pressurized equipment industry hugely seems to be improvements in hydrogen energy, i.e. faster reactors that can extract energy from hydrogen rapidly.

1.4 – THESIS

In this thesis, as well as the scope and formulae utilized in VESSELAID are explained in details, insight regarding pressure vessels and associated process equipment is also given.

In Chapter 2, background information regarding the major key terminology and parameters is given for the VESSELAID's scope of process equipment, their design and analysis. In Chapter 3, design and analysis of pressure vessels subjected to internal pressure and fluid static pressure is discussed.

Chapter 4 includes the philosophy of VESSELAID for all kinds of loadings included; wind, seismic, piping, grating, and other loads. Chapter 5 discusses support analysis, for each of the four support types available.

Chapters 6, 7, and 8 are the parts that are not related directly with the pressure vessels, but rather their pressure containing auxiliaries and oil storage. Respectively pressure relieving, heat exchanger utilities, and API 650 tanks and their implementations in VESSELAID are discussed in detail. Chapter 9 is the section for discussions and conclusions, including contributions of this study, lessons learned, future work recommended to be performed.

Appendices A and B cover general information referred within the thesis, which are joint efficiency parameters and sample maps for wind and seismic loading. Appendix C includes the error messages that VESSELAID generates, and refers to various equations in previous chapters. Appendix D, briefly explaining VESSELAID's menus and screens, is a reference manual for users.

CHAPTER 2:

BACKGROUND INFORMATION

2.1 – PRESSURE VESSELS AND RELATED DESIGN PARAMETERS

2.1.1 – Internal Pressure Design of Pressure Vessels

The internal pressure design methods utilized in VESSELAID depend on the ASME-VIII Div. 1 Sections UG-27 and UG-32, which include basic formulae for designing cylindrical shells; hemispherical, elliptical, flanged and dished heads. VESSELAID also includes the effect of the static fluid pressure on these components induced by the liquid or gas within the vessel, which is also included in the weight summary that VESSELAID generates, if desired. It must be noted that the minimum required thickness for a pressure vessel to withstand internal pressure is found after all allowances are considered and the minimum thickness that the material shall have during the vessel's operation cycle is determined. Reduction of the material thickness is mainly based on three possible reasons:

- Corrosion: The main reason and the critical parameter that must be considered is the *corrosion allowance*, which is included in VESSELAID. It must be noted that corroded thickness must be considered for design for operation of the vessel, whereas uncorroded thickness is the main parameter for design for the testing and commissioning phase of the vessel. The severity of the corrosion allowance depends on the external and internal media of the vessel.
- Forming / fabrication: Reduction induced by material forming is experienced during the fabrication phase of the vessel material, and is not included in

VESSELAID assuming that the material fabricator guarantees the minimum thickness, after having considered the forming operation, which is also called as *forming allowance.*

- Reduction induced by the deformation of the vessel: This reduction is remarkably small with respect to the above two, and is generally not included in vessel design practices unless quite small tolerances in material fabrication and installation exist.

The other parameter that is crucial with respect to internal pressure design is the allowable stress of the material. ASME-VIII Div. 1 includes tables and graphs regarding allowable stresses for every kind of material utilized, under sub-section 23 of each section for the specific kind of material as follows:

- UCS-23 and UCS-27 for carbon and low-alloy steels
- UNF-23 for non-ferrous metals
- UHA-23 for high-alloy steels
- UHT-23 for ferritic steels with tensile properties improved by heat treatment
- OCI-23 for cast iron and dual cast iron

The parameters affecting allowable stress are the service temperature and material treatment operations, such as normalization and fine grain practice. VESSELAID's material database consists of the allowable stresses under normal service conditions for materials of standard treatment, which consist of the major part of the vessels designed in the industry, and does not include service temperature or other parameters defining allowable stresses. It is always optional for the user to enter the required allowable stress value where a material selection is required as well as elastic modulus and specific gravity.

In VESSELAID, allowable stresses of steel materials are generally specific, i.e. a single allowable stress is generally enough such as bending allowable stress, tensile allowable

stress, or shear allowable stress. AISC Manual states that these stresses are indeed dependent on yield strength of the steel material [7], and VESSELAID utilizes these as follows:

- Allowable bending stress = 66% of yield strength
- Allowable tensile stress = 60% of yield strength
- Allowable shear stress = 40% of yield strength

Joint efficiency and radiographic inspection are the other parameters that are of great importance which is explained below in Section 2.1.2.

2.1.2 - Joint Efficiency Factors

The rules set by ASME-VIII Div. 1, Sections UW-11 and UW-12 [1] regarding joint efficiencies are also used by almost every other code including welding of materials, which bring a safe and satisfactory approach to welding reliability and quality. The type of the radiographic inspection on circumferential and longitudinal welds, and the types of the joints are described in UW-11 and UW-12 are included in VESSELAID and can be seen in Appendix A, and the user can also enter a factor manually, as the basic approach to the joint efficiency is that it is a factor reducing allowable stress of a material.

It must be noted that in some cases the vessels are exempt from inspection, especially small vessels with a capacity lower than 0.14 m^3 and a design pressure smaller than 1.72 MPa, or with a capacity lower than 0.0425 m^3 and a design pressure smaller than 4.1 MPa if also satisfactory per U-1, UG-91, UG-116. Vessels that are not included within the scope of the ASME-VIII Div. 1, per U-1, are also exempt from radiographic inspection if any of the below hold:

- Nominal capacity smaller than 0.45 m^3
- Internal pressure smaller than 0.1 MPa

- Greatest dimension among diameter, width, height, or diagonal smaller than 15.2 cm

2.1.3 – Pressure and Leakage Testing

Pressure and leakage testing of all mechanical systems including internal pressure or enclosed fluid is the key issue in commissioning phase that should be performed as mandatory inspections. Vessels, tanks, piping systems and equipment as valves, pumps and so on all have specified testing procedures under relative codes.

Per UG-99 [1], hydrostatic test with water is the recommended method, at a specified pressure of 1.3 folds of the maximum allowable operating pressure (MAOP) -or design pressure if MAOP is not available, as included in VESSELAID as a more conservative approach-, if the service and test temperatures are in the same range. Unless not, the pressure multiplier then becomes 1.3 times the ratio of material allowable stresses in service temperature and test temperatures.

Referring to UG-100 [1], unless a hydrostatic test can not be performed safely, pneumatic test is also possible with a pressure of 1.1 fold of the design pressure. Although not preferred, this method may be used if parties such as user, fabricator, installer and third party inspectors agree to. In some other codes this rule is extended such that a hydrostatic pressure test for a short duration of time and a pneumatic leakage test for a long duration of time is equivalent to a hydrostatic test in means of both pressure and leakage tests.

2.1.4 – External Loads on Pressure Vessels and Load Combinations

Structural analysis of both the pressure vessel and necessary supports depend on the external loads caused by environmental factors like wind and seismic forces, loads imposed by vessel connections and attachments like piping at nozzles, gratings and

access structures. All of these, which are referred as external loads, are included in VESSELAID. Being the primary design consideration in support analysis, combinations of those loads may also be the prevailing case for determining the vessel fabrication parameters as material thickness, selection and treatment. Although ASME-VIII Div. 1 or Div. 2 do not constitute solid rules for load analysis (except those applied on nozzles), many design references are available prepared by combining theoretical mechanics and applicable practices. These reliable and internationally accepted references are utilized in loading analysis in VESSELAID.

Primary parameters in wind and seismic load analyses are as follows:

- Location of the vessel determining wind exposure category and basic wind speed for static wind analysis:

  Charts and graphs indicating basic wind speed are available in national codes. As an example, basic wind speed map of USA in Imperial units taken from ASCE 7-98 (American Society of Civil Engineers) Code [2], is given in Appendix B.1. Wind exposure is a parameter introduced by ASCE 7 Codes that states the fact that a higher basic wind speed with a low exposure may create lower forces than a lower basic wind speed with a high exposure and the force is parabolically proportional to the height of the structure, unlike other codes as ANSI A.58.1 which take wind force is linearly proportional to the height [6]
- Soil and ground properties determining damping of the structure for dynamic wind analysis:

  In practice, it is quite hard to establish a damping coefficient for a complicated vessel constructed, calculation of which require modal analysis and evaluation of periods of vibration. This method is quite accurate but if these parameters are not known, soil and ground properties are used for establishing damping of the structure conservatively. In VESSELAID, both options are available, i.e. namely accurate method and conservative method. Dynamic wind analysis also include ovaling analysis which is a phenomenon occurring in long vessels mainly during installation.

- Seismic zone for seismic analysis:
  This feature is based on Uniform Building Code (UBC) and referred from [6]. Like in basic wind speed maps, maps indicating seismic zones are also available in national codes. To set an example, seismic zone of USA is given in Appendix B.2.

Most of other parameters required for wind and seismic analyses of vessels mainly depend on the vessel geometry and materials, and most coefficients vary with these parameters.

Piping loads are assumed to be induced to the pressure vessels because of the flow discharge or intermittence. An approximate and conservative method is utilized in VESSELAID for evaluating piping moments [4], and no weight is induced on the vessel as it is assumed to be resisted by piping supports and taken into consideration in piping stress analyses per ANSI B31 Codes.

Addition of ladder and grating loads, and input of magnitudes of other loads are also possible in VESSELAID.

2.2 – OTHER SPECIAL FEATURES

2.2.1 – Pressure Relieving and Safety Devices

Code requirements regarding pressure relief devices are given in UG-125 through UG-136 [1], mainly stating necessities of using relief devices. VESSELAID, on the other hand, utilizes API RP 521 - Guide for Pressure Relieving and Depressurizing Systems [9], which actually include procedures for selecting the safety valve accordingly. Some other auxiliary codes and standards are also utilized. VESSELAID can perform relief calculations for two types of vessels as stated in Chapter 6:

- Vessels with flow input and output (scenarios are gas / vapor relief, liquid relief, and steam relief): The main parameters decisive on results are the flow capacity and allowable pressure. Various parameters are also required regarding vessel characteristics, service conditions, and the valve type.
- Vessels for storage purposes (scenarios are fire and thermal expansion): The main parameters required are the type and characteristics of the fluid stored and the allowable pressure.

2.2.2 – API 650 Tanks

API 650 Tanks are included in VESSELAID because of their enormous number of application areas, and VESSELAID is capable of analyzing API 650 Tanks (Welded Steel Tanks for Oil Storage) component by component as:

- Roofs (cone or dome)
- Shells (four different methods can be used)
- Annular plates

VESSELAID also analyzes roof-to-shell junction strength, roof uplift with respect to uplift, and shell stability against wind forces using buckling analysis of shells.

2.2.3 – Heat Exchanger Utilities: Tubesheets and Bellows

Tubular heat exchangers are the mostly used type of heat exchangers in the industry, and TEMA (Tubular Exchangers Manufacturers Association) rules [11] govern all aspects of this particular process equipment. They mainly consist of U-tubes, tubesheets, baffles, bellows, and nozzles. Tubesheets and bellows are the two most critical parts that are quite open to create problems, hence require a solid understanding; i.e. generally, an individual fully understanding ASME-VIII Div. 1 can design other parts easily, but may have troubles when it comes to internal pressurized parts such as tubesheets and bellows. Both ASME and TEMA approaches are available in the design

of tubesheets, whereas the design of bellows, a kind of stress relieving tool between tubes, are available per theoretical mechanics [4].

CHAPTER 3:

PRESSURE VESSEL COMPONENTS

3.1 – INTRODUCTION

Pressure vessel components include cylindrical shells, heads that can be of elliptical, flanged and dished, hemispherical, and torispherical type, and transition sections between cylindrical shells of different diameters. Various rules regarding the construction of these are present, and VESSELAID performs calculations regarding cylindrical shells and three most common types of heads.

3.2 – CYLINDRICAL SHELLS

The classic equation to determine stress in a thin cylindrical shell under internal pressure comes from the free body diagram in Fig. 3.1 indicating the forces balancing the internal pressure and is simply given as:

$$\sigma_H = \frac{P \cdot R_i}{t_S} \tag{3.1}$$

However, the less the ratio of radius to thickness is –i.e. the more the thickness is or the less the radius is-, the more inaccurate the thin shell theory becomes. This fact leads to thick shell approach, which is more accurate than the thin shell approach. The free body diagram in Fig. 3.2 is the basis of the thick shell approach, and the hoop stress expression with only the presence of internal pressure is given as:

$$\sigma_H = \frac{P \cdot R_i^{\,2} - P \cdot \dfrac{R_i^{\,2} \cdot R_o^{\,2}}{r^2}}{R_o^{\,2} - R_i^{\,2}} \tag{3.2}$$

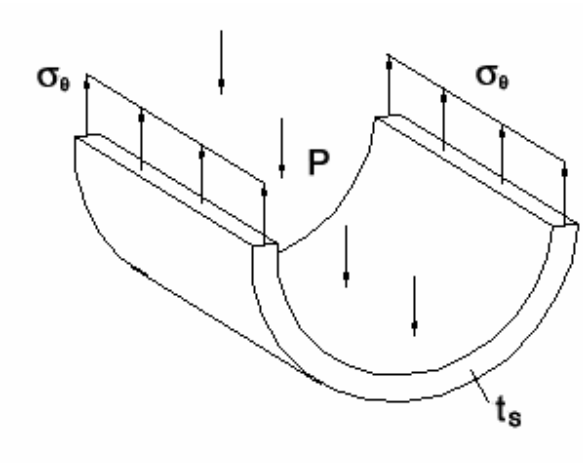

Fig. 3.1 – Stresses on a thin cylindrical shell cross section

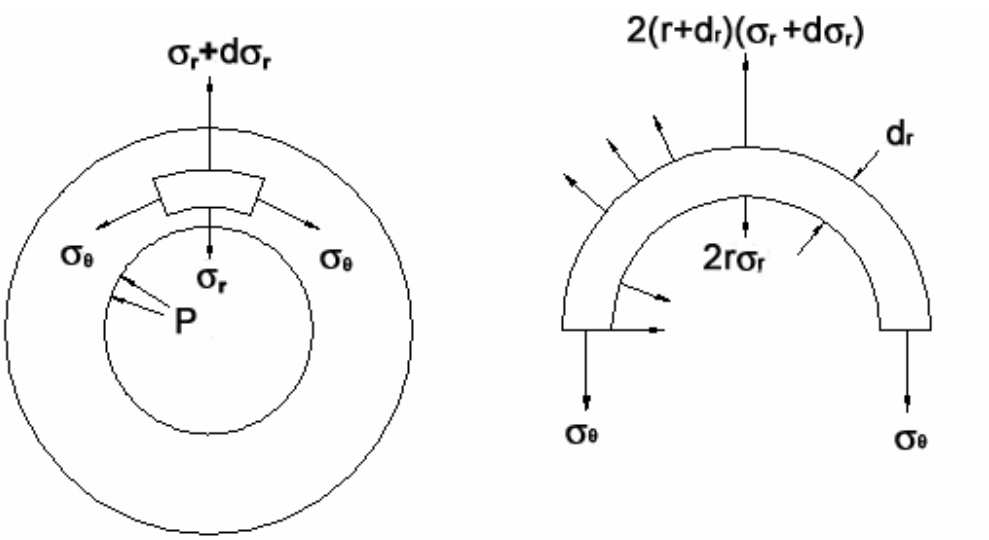

Fig. 3.2 – Free body diagram of a thick cylindrical shell cross section subjected to internal pressure only

The above equations regarding hoop stress caused by internal pressure for thin and thick shells (Eqn's (3.1) and (3.2) respectively) are modified a little bit in ASME-VIII Div. I, and is given as:

$$\sigma_H = \frac{P \cdot (R_i + 0.6 \cdot t_S)}{t_S} \tag{3.3}$$

where corrosion allowance must be considered to find t_S, i.e. the actual thickness must be greater than design thickness.

Introducing the joint efficiency factors, E_L and E_C (see Section 2.4 for joint efficiencies) that determines the reliability of welding and Allowable Stress, S, which is compared to the hoop stress, the minimum thickness required for a cylindrical shell under internal pressure is:

$$t_S = \frac{P \cdot R_o}{S \cdot E_L + 0.4 \cdot P_i}, \text{ for longitudinal joints} \tag{3.4}$$

The understanding and conservativeness of this equation that ASME Code and VESSELAID utilizes with respect to the theoretical formulas is given in Fig. 3.3, as hoop stress vs ratio of inner and outer radii, i.e. effectiveness of thickness with respect to vessel radii. As seen from the figure, for a given geometry and internal pressure, assuming the joint efficiency is one, the thick shell equation yields the greatest hoop stress and thin shell equation yields the smallest one. Eqn. (3.3) hence can said to be far too conservative than the thin shell theory, and a little less conservative than the thick shell theory, notifying that it is really close to the thick shell approach especially for low values of radii ratio.

The equation for circumferential joints is given in Eqn (3.5) below. It must be noted that for the same joint efficiency, Eqn (3.5) is nearly 100% conservative than Eqn. (3.4), i.e. yields nearly half of the thickness required by Eqn. (3.4).

$$t_S = \frac{P \cdot R_o}{2 \cdot S \cdot E_C + 1.4 \cdot P}, \text{ for circumferential joints} \tag{3.5}$$

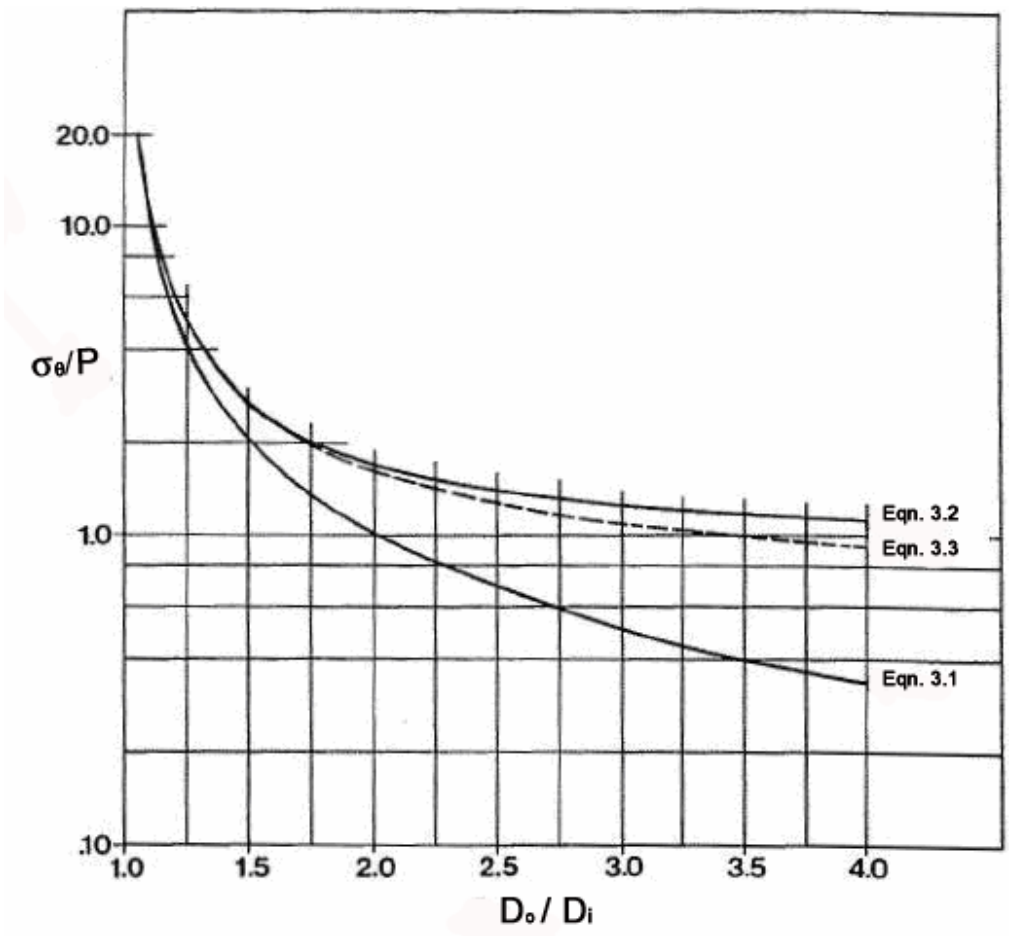

Fig. 3.3 – Comparison of equations of thin shell theory, thick shell theory and ASME equation [3]

It must be noted that Eqn (3.4) applies for:

- $P \leq 0.385 \cdot S \cdot E_L$
- or $t_S \leq \frac{R_i}{2}$

For cases violating the above criteria, VESSELAID uses ASME-VIII Div. 2 Code's plastic analysis equation, which is:

$$P = \frac{\sigma_Y}{\sqrt{3}} \cdot \ln\left(\frac{R_i + t_S}{R_i}\right) \tag{3.6}$$

ASME-VIII Div. 2's equation under normal conditions (elastic) is:

$$t_S = \frac{P \cdot R_i}{S - 0.5 \cdot P} \tag{3.7}$$

3.3 – FORMED HEADS

To cover the cylindrical shell, a variety of methods are present, with the fact that formed heads are the most commonly used types rather than flange covers or flat covers, because of their strength, durability, and economical aspects. There are three types of heads that VESSELAID can analyze, hemispherical heads, flanged and dished heads, and elliptical heads, which correspond to the most commonly-used head types.

<u>Hemispherical Heads</u>

The common practice in using hemispherical heads, a.k.a. hemi-heads (see Fig. 3.4), is that the required thickness is approximately half of the required thickness of a cylindrical shell provided the fabrication materials and loads are the same. Hemi-heads are especially economical when compared to other types when constructed of expensive

alloys as nickel or titanium. When carbon steel is the main fabrication material, flange and dished heads however prevail when economy is considered.

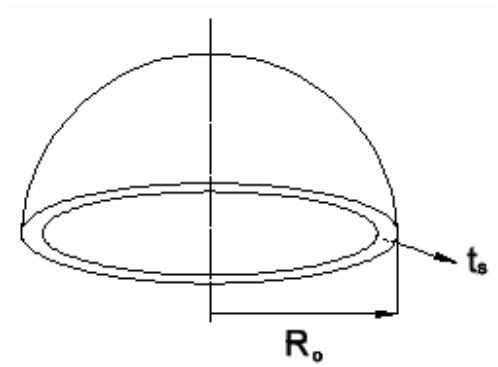

Fig. 3.4 – Hemispherical head geometry

Although there are welding requirements of hemi-heads in ASME-VIII Div. 1 regarding contouring the weld because of the variation in thicknesses of shell and head, VESSELAID considers only welding joint efficiency for internal pressure design, equation of which is given by:

$$t_{HS} = \frac{P \cdot R_i}{2 \cdot S \cdot E_H - 0.2 \cdot P} \tag{3.8}$$

<u>Flanged and Dished Heads, Elliptical Heads</u>

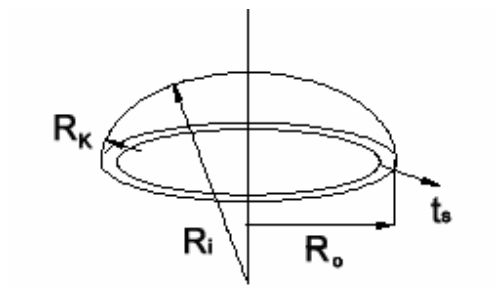

Fig. 3.5 – Flanged and dished head geometry

Although used commonly in tanks with low pressure (DIN tanks with pressures slightly higher than atmospheric pressure), uses in pressurized vessels are also common for these heads (see Fig. 3.5 and Fig. 3.6.) Their thickness is usually approximately equal to the cylindrical shell that they are attached to. Although seeming to be economically prevailing over elliptical, the excess in thickness acts as an extra reinforcement on nozzles on these heads, especially close to the head-to-shell circumferential weld.

$$t_{FE} = \frac{P \cdot R_i \cdot K}{S \cdot E_H - 0.2 \cdot P} \tag{3.9}$$

where

$$K = \frac{1}{6} \cdot \left[2 + \left(\frac{R_i}{h_{FE}} \right)^2 \right]$$

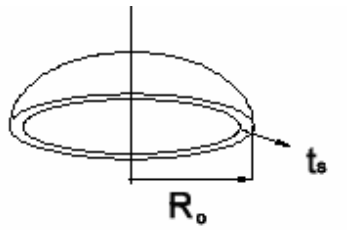

Fig. 3.6 - Elliptical head geometry

It must be noted that the knuckle radius, R_K, for flanged and dished heads can be minimum 6% of the internal diameter.

CHAPTER 4:

LOADING ANALYSES OF VESSELS: WIND, SEISMIC, ADDITIONAL LOADS, AND LOAD COMBINATIONS

4.1 - INTRODUCTION

Vessels, especially tall vessels installed in vertical position require special design considerations, considering wind forces acting occasionally and seismic forces acting rarely. Various combinations of loads, on which wind and seismic loads have a major effect, should be checked, noticing that the worst case may differ from vessel to vessel. In general, wind loading and earthquake loading is not applied at the same time. Because of this reason, seismic loading prevails for very heavy and short vessels, whereas wind loading is the dominating design criterion for slender vessels.

Apart from wind and seismic loads, various additional loads are applied on vessels, especially used for process purposes. Piping at nozzles and attachments, especially ladders and gratings that provide access for high columns and vessels, induce considerable amount of loads which also should be taken care of.

4.2 – WIND LOADING ANALYSIS

Analysis of wind loading includes combinations of wind, internal pressure, and weight, in order to determine whether the vessel thickness is satisfactory for all the relative combinations. VESSELAID calculates wind and seismic loads according to various parameters mentioned below, also performs ovaling vibration check which is a dynamic

wind loading parameter and calculates a magnification factor that the static wind load must be multiplied with to include dynamic effects.

VESSELAID's wind loading analysis depends on ASCE 7-98 Code, in which the "*basic wind speed*" is the main parameter varying with locations of vessel installation, which can be determined from maps found in the same Code.

4.2.1 – Static Analysis

Wind force acting on a tall vessel is given by:

$$F_W = q_Z \cdot G_F \cdot C_F \cdot A_{CS} \tag{4.1}$$

where q_Z is the effective wind pressure combining the concepts of basic wind pressure at 10m, and velocity wind pressure. It is given by:

$$q_Z = 0.317 \cdot K_Z \cdot V_{WB}{}^2 \tag{4.2}$$

where V_{WB} is in [km/h]'s.

Wind force increases parabolically above heights of 5 m. That is because the velocity pressure coefficient, K_Z, is defined as:

$$K_Z = 2.58 \cdot \left(\frac{3 \cdot Z_V}{z_g} \right)^{2/\alpha}, \text{ for } h_V > 5\text{m}$$

$$K_Z = 2.58 \cdot \left(\frac{15}{z_g} \right)^{2/\alpha}, \text{ for } h_V \leq 5\text{m} \tag{4.3}$$

where Z_g and α are determined by exposure category as seen in Table 4.1.

Table 4.1 – Exposure Category Constants

Exposure Category	α	z_g	C_{CO}
A	3	1500	0.025
B	4.5	1200	0.01
C	7	900	0.005
D	10	700	0.003

Gust factor is also a very important parameter in wind analyses. When multiplied by the mean wind load, gust factor results in an equivalent static wind load that would induce the same deflections equal to that of a "gusty" wind, providing a quasi-static analysis. It is also known that the worst case for wind analysis is not caused by the maximum wind velocity, but rather the highest gust enveloping capacity determined by gust duration and effective gust diameter. Gust factor, used to compensate for this switch of worst case, is defined as:

$$G_F = 0.65 + \left(\frac{P_P}{\beta} + \frac{(3.32 \cdot T_E)^2 \cdot C_{SS}}{1 + 0.002 \cdot C_H} \right)^{0.5} \tag{4.4}$$

where

$$P_P = 1 - (1 - P_A)^{n_L}$$

$$T_1 = \frac{2.35 \cdot C_{CO}{}^{0.5}}{\left(\frac{h_V}{10} \right)^{1/\alpha}}$$

For a vessel with many considerable obstructions, the gust factor is defined as:

$$G_F = 0.65 + \left(\frac{1.25}{\beta} + \frac{(3.32 \cdot T_E)^2 \cdot C_{SS}}{1 + 0.001 \cdot C_H} \right)^{0.5} \tag{4.5}$$

VESSELAID determines the total wind moment after forces below 5 m and above 5 m are evaluated independently and multiplied by centroids of the 5 m section and the section above simultaneously.

4.2.2 – Dynamic Analysis

As wind loads occur quite often than seismic loads, dynamic analysis is also necessary for design. This includes the determination of a dynamic magnification factor (*DMF*), which the principal rule of structural dynamics states the relationship with excitation frequency ratio, as seen in Fig. 4.1.

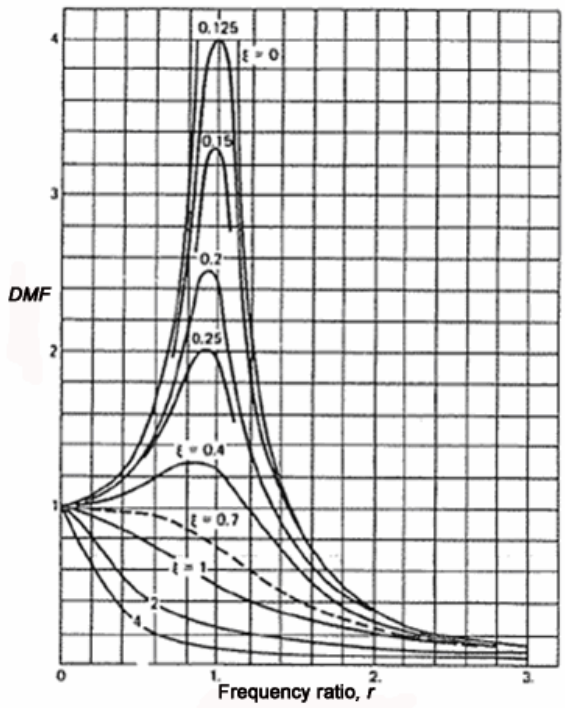

Fig. 4.1 – *DMF* vs frequency ratio graph [6]

Two methods are utilized to find *DMF*. The primary and the most accurate one utilizes vessel weight (W_O) and vessel stiffness (k_{VS}). *DMF* is then given by:

$$DMF = \frac{C_C}{2 \cdot C_S} \tag{4.6}$$

where;

$$C_S = k_{VS}$$

$$C_C = 2 \cdot (W_O \cdot k_{VS})^{0.5}$$

As stiffness is hard to determine exactly, a conservative method may be used regarding the foundation and soil properties of the location of vessel construction, as given in Table 4.2.

Table 4.2 – Conservative Method for DMF Determination

Damping, Foundation, Soil, Support Properties	***DMF***
Low damping: rocky soil, low-stressed pile or structural frame support	60
Average damping: Moderately stiff soil, normal spread footing or pile support	40
High damping: Soft soil, foundation on highly stressed friction piles	25

It is also necessary to check the ovaling phenomenon, which is especially a critical problem in stacks under operation and vessels under construction. The round shell, when subjected to ovaling as a result of the dynamic wind loading, loses its strength under a deformation of buckling, the deflected shape being oval. In this analysis, the vessel is considered to be a ring that has a natural frequency of:

$$f_R = \frac{7.58 \cdot t_S \cdot \sqrt{E_{MS}}}{60 \cdot D_M{}^2} \tag{4.7}$$

The vortex-shedding frequency of a vessel is approximately given by:

$$f_V = \frac{15}{D_M} \tag{4.8}$$

To prevent ovaling, it must be ensured that:

$$f_R < 2 f_V \tag{4.9}$$

If the ovaling vibration is imminent, the wind velocity to cause this phenomenon together with resonance is also given as:

$$V_O = 150 \cdot f_R \cdot D_M \tag{4.10}$$

4.3 – SEISMIC LOADING ANALYSIS

The method utilized by VESSELAID for the design of vessels under seismic loading depends on the Uniform Building Code (UBC). Among all the methods, UBC constitutes one of the simplest and most practical technique, which would be enough for structures except ones like buildings more than 50 story of height, large dams, and suspension bridges in which interaction with the ground is the prevailing parameter for the design, and facilities like nuclear power plants where cracking and failure of a single point in the core can cause disasters; all of which require more thorough and detailed dynamic analyses.

According to UBC, the base shear applied on the structure is given by the multiplication of various factors, which is given as:

$$F_E = Z_S \cdot C_{IF} \cdot C \cdot K \cdot C_{SI} \cdot W_O \tag{4.11}$$

Z_S is determined by the seismic zone of the location of the vessel, which is rated from 0 to 4, 0 being the zone requiring no seismic analysis, and 4 being the zone of the major

earthquake centres of the world like Japan, southwestern states of US, especially California. The seismic zone factors, Z, are 0, 0.1875, 0.375, 0.75, and 1 simultaneously for the zones from 0 through 4.

C_{IF} is the occupancy importance factor, which is taken as 1 for all process equipment. K is taken as 2 for vertical vessels on skirts, and 2.5 for vessels on skirts with thickness of the shell is 1.5 times or greater than the thickness of the skirt.

The structure period response factor, C, is determined by:

$$C = \frac{1}{15 \cdot \sqrt{T_V}} \tag{4.12}$$

where it must be noted that the maximum value of C can be 0.12.

To find the fundamental period of vibration, various formulations are utilized. The most basic one for a process vessel of uniform construction is:

$$T_V = 0.128 \cdot \sqrt{\frac{W_O \cdot h_V^{\ 3}}{E_S \cdot I_M}} \tag{4.13}$$

where;

$$I_M = \frac{\pi}{8} \cdot \left(D_O + t_S\right)^3 \cdot t_S \text{, for } \frac{D_M + t_S}{t_S} \leq 20$$

$$I_M = 0.049 \cdot \left(D_O^{\ 4} - D_i^{\ 4}\right) \text{, for } \frac{D_M + t_S}{t_S} > 20$$

After the fundamental period of vibration is determined, the site structure interaction factor can also be found, as:

$$C_{SI} = 1 + \frac{T_V}{T_S} - 0.5 \cdot \left(\frac{T_V}{T_S}\right)^2 \qquad \text{, for } T_V / T_S \leq 1$$

$$C_{SI} = 1.2 + 0.6 \cdot \frac{T}{T_S} - 0.3 \cdot \left(\frac{T}{T_S}\right)^2 \qquad \text{, for } T_V / T_S > 1 \tag{4.14}$$

where T_S is the characteristic site period. When T_S can not be appropriately calculated, C_{SI} is taken as 1.5.

In practice, Eqn. (4.11) is generally substituted by its simplified expression as:

$$F_E = C_E \cdot W_O \tag{4.15}$$

where certain values of C_E, seismic coefficient, are established throughout experience. 0.28 - 0.3 for this parameter is a common usage in Turkey, where 0.4 is the most conservative value for seismic design.

For a cylindrical shell of uniform cross-section, the distribution of the total earthquake force is as shown (see Fig. 4.3):

- At the upper head-to-shell junction, a concentrated force is applied as:

$$F_T = 0.07 \cdot T_V \cdot F_E \text{, for } T_V \leq 0.7 \text{ sec.} \tag{4.16}$$

  This force is taken as zero for $T_V > 0.7$ sec.

- Along the vertical side of the shell, a linearly distributed load as following is applied:

$$F_X = (F_E - F_T) \tag{4.17}$$

Once the values of F_X and F_T are determined, the seismic moment is evaluated as:

$$M_S = F_T \cdot h_V + F_X \cdot \left(\frac{2}{3} \cdot h_V \right) \tag{4.18}$$

VESSELAID calculates all shear forces and seismic moment created as a result of these shears, and incorporates these into other modules where applied moment is an input.

4.4 – PIPING, GRATING, AND OTHER LOADS

The nozzle analysis is indeed performed by WRC (Welding Research Council) 107 Code which yields whether a nozzle is acceptable or not, but does not cover the effects of these nozzles and piping on the vessel. In VESSELAID, it is possible to enter piping attachments on nozzles, which causes considerable moments on the vessel. Various methods are utilized for calculating this effect. The most commonly used method is an approximate and conservative method, rather a correlation, which is developed throughout experience stating that the moment load induced by piping is [5]:

$$M_P = 6.78 \cdot (NPS + 3)^3 \tag{4.19}$$

Ladders and gratings also induce vertical loads and may induce moments unless grating revolutions are complete, i.e. folds of 360°. If revolutions are not complete, VESSELAID calculates grating moments by simply multiplying the centroid distance with the grating weight. Other loads also can be entered in categories as vertical loads, shear loads applied at base / support level, and moments.

4.5 – LOAD COMBINATIONS

The shell thickness for vessels, especially slender ones, is determined by other loads, including moment and vertical load, but not only by pressure and static fluid effects. Slender vessels are assumed to act like a cantilever beam under these forces, and the external loads produce bending and shear stresses in the shell. Each case must be checked at operating and test conditions, the differences between which are:

- Applied moments are not taken into account in test conditions, i.e. test is performed without considering wind, earthquake, piping loads, grating loads, and other loads inducing moment
- Shell thickness is non-corroded, i.e. shell is in brand new condition while test is performed
- Test weight differs from operating weight because of the specific gravity and level of the fluid inside.

Neglecting direct shear stress which doesn't have considerable effects in calculations, VESSELAID checks nine cases in operating and test conditions as load combinations as given below.

<u>Case 1: Tangential stress, operating conditions</u>

$$\sigma_T = \frac{P_{IO} \cdot D_M}{4 \cdot (t_S - CA)} < S_A \tag{4.20}$$

<u>Case 2: Tangential stress, test conditions</u>

$$\frac{P_{IT} \cdot D_M}{4 \cdot t_S} < S_A \tag{4.21}$$

Case 3: Longitudinal stress on the windward side, operating conditions

$$\frac{P_{IO} \cdot D_M}{4 \cdot (t_S - CA)} + \frac{4 \cdot M}{\pi \cdot D_M{}^2 \cdot (t_S - CA)} - \frac{W_O}{\pi \cdot D_M \cdot (t_S - CA)} < S_A \tag{4.22}$$

Case 4: Longitudinal stress on the windward side, test conditions

$$\frac{P_{IT} \cdot D_M}{4 \cdot t_S} + \frac{4 \cdot M}{\pi \cdot D_M{}^2 \cdot t_S} - \frac{W_T}{\pi \cdot D_M \cdot t_S} < S_A \tag{4.23}$$

Case 5: Longitudinal stress on the leeward side, operating conditions

$$\frac{P_{IO} \cdot D_M}{4 \cdot (t_S - CA)} - \frac{4 \cdot M}{\pi \cdot D_M{}^2 \cdot (t_S - CA)} - \frac{W_O}{\pi \cdot D_M \cdot t_S} < S_A \tag{4.24}$$

Case 6: Longitudinal stress on the leeward side, test conditions

$$\frac{P_{IT} \cdot D_M}{4 \cdot t_S} - \frac{4 \cdot M}{\pi \cdot D_M{}^2 \cdot t_S} - \frac{W_{IT}}{\pi \cdot D_M \cdot t_S} < S_A \tag{4.25}$$

Case 7: Maximum compressive stress

This case occurs at the bottom tangent line on the leeward side when the internal pressure is zero gauge.

$$\frac{4 \cdot M}{\pi \cdot D_M{}^2 \cdot (t_S - CA)} + \frac{W_O}{\pi \cdot D_M \cdot (t_S - CA)} < S_A \tag{4.26}$$

Case 8: Maximum shear stress, operating conditions

$$\frac{P_{IO} \cdot D_M}{8 \cdot (t_S - CA)} + \frac{2 \cdot M}{\pi \cdot D_M{}^2 \cdot (t_S - CA)} + \frac{W_O}{2 \cdot \pi \cdot D_M \cdot (t_S - CA)} < \frac{S_A}{2} \tag{4.27}$$

Case 9: Maximum shear stress, test conditions

$$\frac{P_{IT} \cdot D_M}{8 \cdot t_S} + \frac{2 \cdot M}{\pi \cdot D_M{}^2 \cdot t_S} + \frac{W_T}{2 \cdot \pi \cdot D_M \cdot t_S} < \frac{S_A}{2} \tag{4.28}$$

It must be noted that Cases 8 & 9 are maximum shear stresses analyzed by maximum shear theory that ASME VIII Div. 2 utilizes [4], hence called as Div. 2 shear stresses and also they are algebraically the difference between the tangential stresses (Case 1 and Case 2) and the longitudinal stresses on the leeward side (Case 5 and Case 6).

CHAPTER 5:

STRUCTURAL ANALYSIS OF SUPPORTS

5.1 – INTRODUCTION

Support structures of vessels have a crucial importance in means of design and construction. Designing and manufacturing the vessel appropriately have no meaning unless an appropriate support is chosen and constructed. VESSELAID analyzes all the support types that are used in the industry today as seen in Fig. 5.1, which are:

1. Skirts for vertical vessels (straight or flared types, base plates and anchor bolt design with respect to three methods are available)
2. Support legs for vertical and spherical vessels (pipe cross section or user defined profile, optional cross-bracing analysis and simplified anchor bolt design are available)
3. Lugs for vertical vessels (girders, i.e. type of lugs when stiffening rings are continuous are available)
4. Saddles for horizontal vessels (many auxiliary components are available)

In all the support analyses above, VESSELAID also includes base plates that are utilized primarily for two purposes as:

- To distribute the vertical load over more area
- To accommodate the anchor bolts, which prevent overturning or swaying from lateral wind and earthquake loads

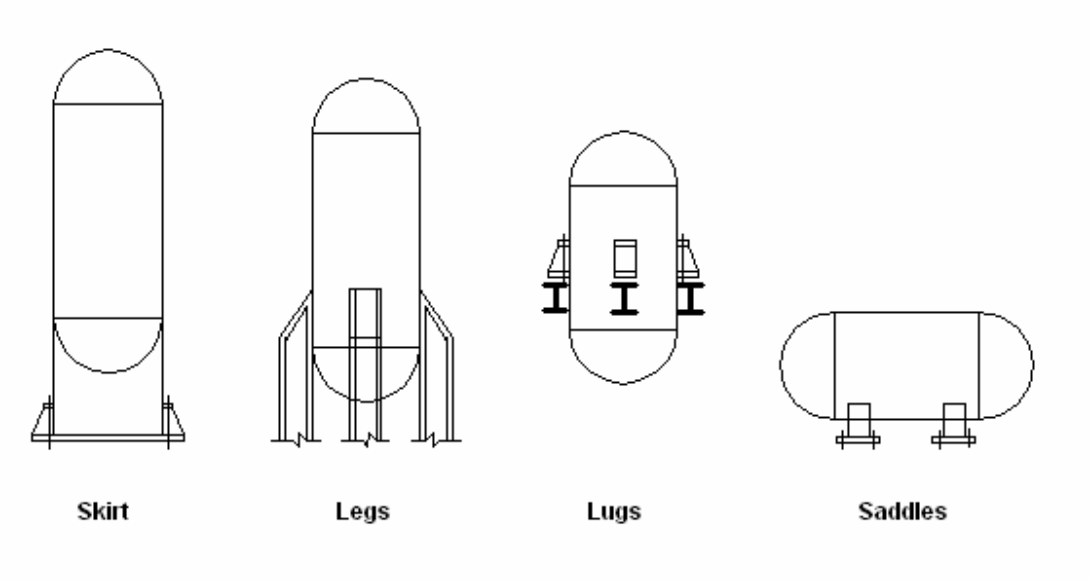

Fig. 5.1 – Vessel supports, from left to right: skirt, legs, lugs, saddles

Base plates also improve the stiffness and rigidity of the support structure by itself alone, and by accommodating additional gusset plates and stiffening rings that are generally welded to the base plate. As well as supports, base plates and anchors, VESSELAID includes many analyses regarding relative parameters, as stated in the following sections.

5.2 – SKIRTS

Skirts are generally used for tall vessels, towers, process columns that heavy wind forces affect. It must also be noted that steel frames are also generally utilized at higher levels of these vessels.

5.2.1 – Skirt Shell

The support skirts are welded directly to the vessel bottom head or shell. VESSELAID can analyze the possible two types of welds; namely butt welds (Type 1) and lap joints (Type 2), as can be seen in Fig. 5.2. Skirts can also be straight or flared. Butt-welded

straight skirt type is the most-commonly used configuration in tall vessels and towers. The centrelines of the skirt shell and shell plate are approximately coincident. If the uplift force caused by external moments is too high, number of bolts may be increased or skirts can be flared such that the diameter at the bottom (connecting the skirt to the ground) is larger than the diameter at the top (connecting the skirt to the vessel). The localized bending stresses in straight skirts are generally less than flared skirts. Lapped joints, on the other hand, are utilized when there are high external loads and cyclic loads, and there are harsh environmental conditions such as high temperature. However, care should be taken in that lapping should not prevent radiographic inspection of the head-shell weld seam. Flared skirts with laps are used for very high columns with extra high moments applied on them.

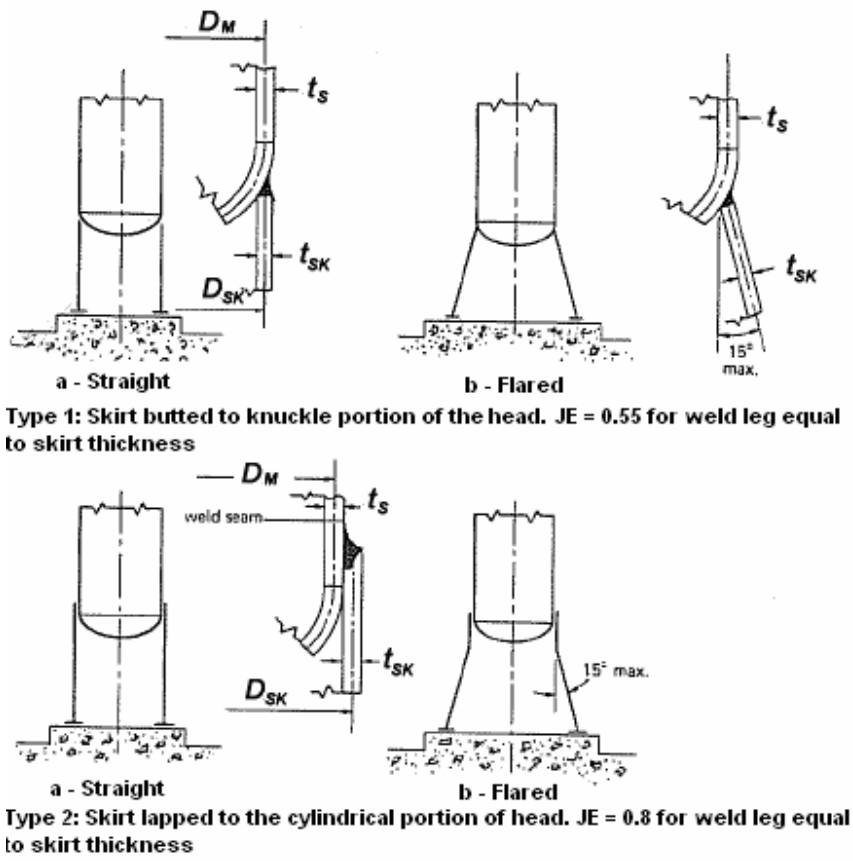

Fig. 5.2 – Types of skirt weld [4]

The factors determining the skirt shell thickness are given below:

- The maximum longitudinal stress due to the external moment M and weight W at the base should not exceed the allowable stress, i.e.:

$$\sigma_{L,\max} = -\frac{W_O}{\pi \cdot D_{SK} \cdot t_{SK}} \pm \frac{4 \cdot M}{\pi \cdot D_{SK}{}^2 \cdot t_{SK}} < S_A \tag{5.1}$$

- The compressive stress at the base under test conditions, if the vessel is tested in vertical position, should not exceed the allowable stress, i.e.:

$$\sigma_{CO,\max} = -\frac{W_T}{\pi \cdot D_{SK} \cdot t_{SK}} < S_A \tag{5.2}$$

- The maximum stress in the weld between skirt and weld often determines the support skirt thickness. It should be noticed that joint weld efficiency depends on the type of weld used, which are seen in Fig. 5.2.

$$t_{SK} = \frac{\dfrac{W_O}{D_{SK} \cdot t_{SK}} + \dfrac{4 \cdot M}{\pi \cdot D_{SK}{}^2}}{E_{SK} \cdot S_A} \tag{5.3}$$

- If a large access or pipe opening is located in the skirt shell, the maximum stress at a section of through the opening must not exceed the allowable stress, i.e.:

$$\sigma_O = -\frac{W_O}{\pi \cdot D_{SK} \cdot t_{SK}} \pm \frac{4 \cdot M}{\pi \cdot D_{SK}{}^2 \cdot t_{SK}} - \frac{L_O \cdot D_{SK}}{\pi} < S_A \tag{5.4}$$

5.2.2 – Baseplates

In skirts, baseplates are used in the form of rings and can be designed in two types, namely type A and type B.

In type A, the centrelines of anchor bolts and skirt shell does not coincide, rather the centreline of the anchor bolts is located at a specific offset towards outside from the skirt shell centreline by a distance (see Fig. 5.3). Stiffening plates at the top are welded to reinforce the skirt shell to act against localized bending stresses.

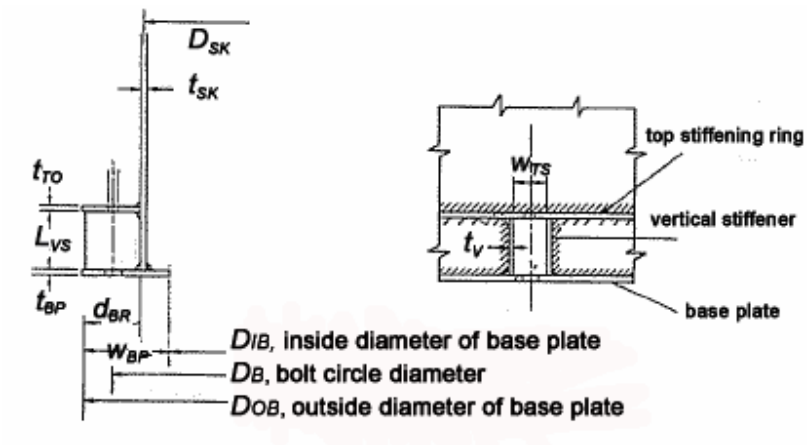

Fig. 5.3 – Base plate of type A [4]

In type B, the centrelines of anchor bolts and skirt shell coincide, i.e. the mean diameters of bolt ring and skirt circle are equal (see Fig. 5.4). In practice, it must be noted that base plates of type A are more commonly used than type B, as openings in skirt shell weakens the shell more and may cause buckling in between those openings.

The primary design parameter required for base plate design is the bearing pressure, p_b, which determines the base ring thickness, generally by AISC Manual in practise, and as in VESSELAID. AISC Manual assumes that the load is uniformly distributed over the entire base plate width, and the reinforcing effect of vertical stiffeners and weakening effect of bolt holes are neglected. The bearing pressure caused by external forces is:

$$p_b = \frac{W_O}{\pi \cdot D_{SK}} + \frac{4 \cdot M}{\pi \cdot D_{SK}^{\ 2}} \tag{5.5}$$

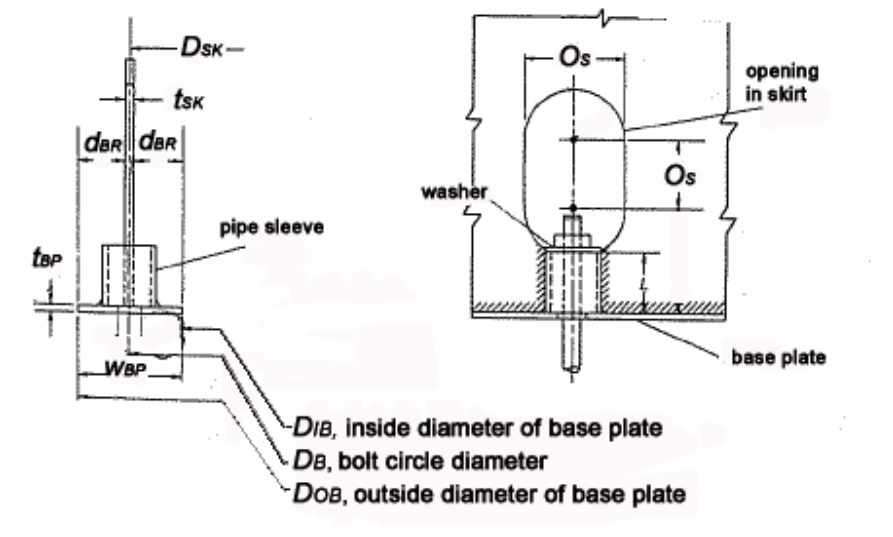

Fig. 5.4 – Base plate of type B [4]

Then, the maximum bending stress in the base ring plate is:

$$\sigma_{BB} = \frac{\dfrac{p_b \cdot d_{BR}^{\ 2}}{2}}{\dfrac{t_{BP} \cdot w_{BP}^{\ 2}}{6}} = \frac{3 \cdot p_b \cdot d_{BR}^{\ 2}}{t_{BP} \cdot w_{BP}^{\ 2}} < S_B \tag{5.6}$$

The required base ring thickness is then:

$$t_{BP} = \left(\frac{3 \cdot p_b \cdot d_{BR}^{\ 2}}{S_R} \right)^2 \tag{5.7}$$

Also, the allowable bearing stress (Σ_{BC}) for concrete should be higher than the applied bearing stress. The allowable bearing stress depends on the compressive strength of concrete (S_{CC}), and per AISC Manual – Sect. 1.5.5, the following equation applies:

$$S_{BC} = k_C \cdot S_{CC} > p_b \tag{5.8}$$

where k_C is a coefficient depending upon the amount of concrete cover; i.e. it is taken as 0.25 when the entire area of the support is covered, 0.375 when approximately one-third of the support is covered, and it is recommended to be taken as 0.3 when there is no accurate information. It must be noted that the allowable bearing pressure for concrete is increased by 33%, i.e. multiplied with 1.33, when wind or earthquake forces are included, per AISC Manual – Sect. 1.5.6.

Skirt-to-base ring weld

To investigate the "holding-down" forces, it must be noted that in type A, the force of the anchor bolt is transferred into the skirt shell by welds connecting the top ring, vertical stiffeners, and base ring; whereas in type B, by weld connecting the pipe sleeves and base ring together. The welds must be continuous, and are thought to carry the loads all along the weld length. On the windward side, the weld must resist the uplift load, and the weld strength ([force/length], or [F/L]) is expressed as:

$$L_W = -\frac{W_O}{\pi \cdot D_{sk}} + \frac{4 \cdot M}{\pi \cdot D_{sk}^{\ 2}} \tag{5.9}$$

On the leeward side for the "loading-down" condition, theoretically, any size of the weld can be sufficient. However, practically, as the ends of the skirts can not be machined to such a precision that produces a uniform bearing, the value of weld strength that justifies and guarantees the design by assuming that the weld takes the full "down-load" and that the skirt is not in contact with the base ring (as it is impossible to predict the number of contact points) is given by:

$$L_L = \frac{W_O}{\pi \cdot D_{sk}} + \frac{4 \cdot M}{\pi \cdot D_{sk}^{\ 2}} \tag{5.10}$$

Size of the welds can be found by dividing the weld strength, L_L or L_W, into allowable weld unit force, f_w [(Force/Length)/Length] where;

$f_w = 0.7315 \cdot S_A$, for wind or earthquake loadings

$f_w = 0.66 \cdot S_A$, for test conditions

and where S_A is the smaller of the allowable stress for the skirt base plate and skirt shell plate.

Top Stiffening Ring

Top stiffening rings are present only in type A base plates, since they are welded to the skirt shell as shown in Fig. 5.3. They provide a more uniform and even distribution of bolt holding reactions into the skirt shell. The stress distribution is complex itself, hence the ring can be assumed as a rectangular plate with dimensions w_{TS} x d_{BR} as in Fig. 5.3, by a beam with the longer ends fixed and load on plate is present. The expression for the minimum thickness for the top stiffening ring is derived from the section modulus formula and is given below as:

$$t_{TO} = \sqrt{\frac{F_B \cdot w_{TS}}{4 \cdot S_{BS} \cdot (d_{BR} - w_{BP})}} \tag{5.11}$$

where F_B is the maximum bolt load (which is approximately 1.25 times bolt stress area times bolt allowable stress), and S_{BS} is the allowable bending stress for the top ring material.

Vertical Stiffeners

The vertical stiffeners are welded between the top stiffeners and the base rings. The most general and conservative method for vertical stiffener analyses is to assume the stiffener as a plate column. For safe application;

$$\frac{F_B}{2 \cdot a} < 150.5 - 0.000169 \cdot \frac{L_{VS}}{r_g}^2 \tag{5.12}$$

where

$a = t_V(n\text{-}0.25)$ in [mm]'s

$r_g = 0.289\ t_V$ in [mm]'s

F_B = bolt load in [N]'s

In practical applications, the size of t_V is usually between 12.5 mm to 30 mm, and depends on the bolt size.

5.2.3 - Anchor Bolts

Skirt anchor bolts that are embedded to the concrete and accommodated by the base rings. These are analyzed by three different methods in VESSELAID, which are;

1 - Simplified Method, using general design conditions by neglecting dynamic effects and necessary preloading of bolts

2 – Complete Method considering initial preload on bolts

3 – Complete Method disregarding initial preload on bolts

Simplified Method

The forces acting on a simple pressure vessel can be seen in Fig. 5.5.

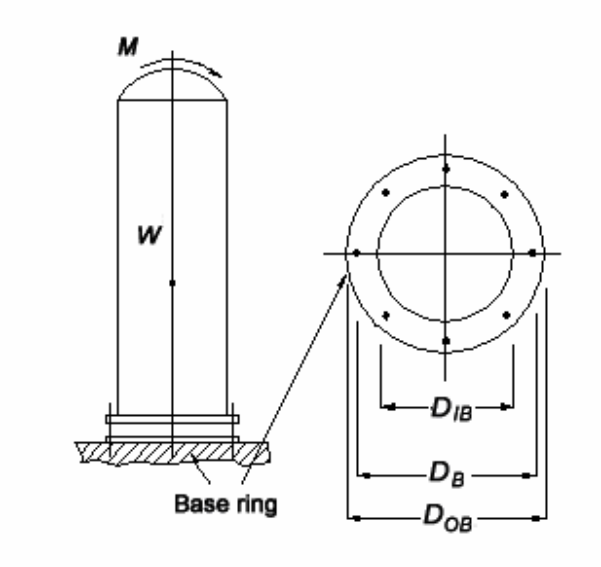

Fig. 5.5 - Forces acting on a simple pressure vessel

The maximum tension on the bolt circumference is found by subtracting the down-pull force caused by the weight of the structure from the uplift force caused by external moments, i.e;

$$F_{TB} = \frac{4 \cdot M}{\pi \cdot D_{SK}^{\ 2}} - \frac{W_O}{\pi \cdot D_{SK}} \tag{5.12}$$

The maximum force F_B on the bolt at distance $D_B / 2$ from the vertical axis is:

$$F_B = \frac{F_{TB} \cdot \pi \cdot D_B}{N_{BA}} \tag{5.13}$$

And the required bolt area is then:

$$A_B = \frac{\frac{4 \cdot M}{D_B} - W_O}{N_{BA} \cdot S_A} \tag{5.14}$$

It must be noted that, in the basic design of anchor bolts, provided the bolts are accommodated suitably and load is distributed uniformly using gaskets or washers, they are not loaded by shear forces, which are taken by the friction between the base plate and foundation. The simplified method is generally applied with a conservative value of allowable stress, i.e. the precision required for safety is introduced in the material strengths, not in the nature of the formulation.

Complete Method, considering initial preload on bolts

In practice, tightening of the bolt nuts is performed to reduce the variable stress range or any other impact effect on the nut, since wind and earthquake loads are dynamic and can lead to sudden surges in force and stress distribution. While performing the analysis, it is assumed that bolt preload and vessel weight is large enough to maintain a compressive pressure between the base and concrete. So, under external moments, the maximum and minimum pressure on the contact area is given by:

$$\sigma_{c,\max} = \frac{N_{BA} \cdot F_i}{A_C} + \frac{W_O}{A_C} + \frac{M \cdot D_{OB}}{2 \cdot I_C} \tag{5.15}$$

$$\sigma_{c,\min} = \frac{N_{BA} \cdot F_i}{A_C} + \frac{W_O}{A_C} - \frac{M \cdot D_{OB}}{2 \cdot I_C} \tag{5.16}$$

where

$A_C = \dfrac{\pi \cdot \left(D_{OB}{}^2 - D_{IB}{}^2\right)}{4}$, $I_C = \dfrac{\pi \cdot \left(D_{OB}{}^4 - D_{IB}{}^4\right)}{64}$ and F_i is the initial bolt load due to pretightening of the nut.

The minimum F_i for compression is when $\sigma_c = 0$, which yields:

$$F_i = \frac{4 \cdot M}{N_{BA} \cdot D_B} - \frac{W_O}{N_{BA}} \tag{5.17}$$

The external moment value used is the maximum value, which indeed fluctuates between zero and this value. The combined total load an a bolt, F, is found by the following derivation using Fig. 5.6.

$$c' \cdot F_c = c' \cdot F_i - e' \cdot (F - F_i) \rightarrow F = F_a + F_c = F_i + C_R \cdot F_a \tag{5.18}$$

where;

c' = rate of compression of the combined supports in (length/force) units

C_R = ratio of rate of compression of combined joints to total compression of the joint and elongation of the bolt e' = rate of elongation of the bolt

F_a = applied operating load

F_c = compressive load on vessel, which is equal to Fi at point a in the below figure

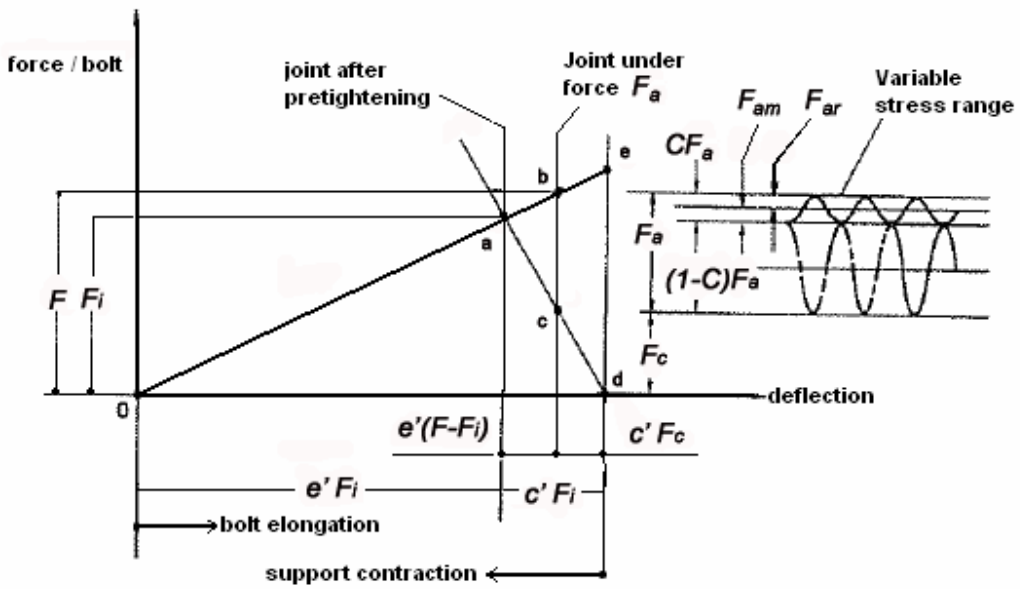

Fig. 5.6 – Force vs deflection diagram for anchor bolt and support base [4]

Substituting for F_a;

$$F = F_i + F_{am} \pm K \cdot F_{ar} \tag{5.19}$$

where

F_{am} = steady load component in bolt, i.e. $C_R \cdot F_a / 2$

F_{ar} = variable load component in bolt, i.e. $\pm C_R \cdot F_a / 2$

K = the stress concentration factor for threaded steel fasteners subjected to tensile loads (see Table 5.1).

Table 5.1 – Stress concentration factors depending on fastener manufacturing method

Stress Concentration Factor for Threaded Steel Fasteners	*K*	
	Rolled Fastener	Cut Fastener
Annealed	2.2	2.8
Quenched and Tempered	3.0	3.8

The factor C_R, as described above, is simply the ratio of rate of compression of combined joints to the total compression of the joint and elongation of the bolt. This factor is generally quite small for hard elastic joints, and it must be noted that it is really difficult to evaluate. A value of ratio of compression of the joint to elongation of the bolt can be assumed to estimate C_R, for instance in practise, this ratio is taken as 0.166, which makes C_R equal to 0.143. To conclude, the exact expression for the bolt area that must be provided is:

$$A_B = \frac{F}{S_{AB}} \tag{5.20}$$

Without the effect of the factor C_R:

$$A_B = \frac{F_i}{S_{AB}} = \frac{\frac{4 \cdot M_O}{D_B} - W}{N_{BA} \cdot S_{AB}} \tag{5.21}$$

which is the expression found in the Simplified Method.

Moreover, this method predicts the minimum approximate initial torque for the required F_i as:

$$T_i = \frac{F_i \cdot (1 + N' \cdot d_b)}{2 \cdot \pi \cdot N'} \tag{5.22}$$

where

N' = number of threads per mm of the bolt

d_b = Nominal bolt diameter in inches

<u>Complete Method, disregarding initial preload on bolts</u>

In this method, nuts are assumed to be tight on bolts and hence no initial load on bolts is assumed. The compression induced by weight or vertical force is neglected as they can even partially be overcome by the applied moment on the windward side.

The moment is resisted by a portion of the area of the anchor bolts and the bearing pressure between the vessel and foundation, which is assumed to be replaced by an equivalent area of steel cylindrical shell, A_S, as seen in Fig. 5.7 and given as:

$$A_S = N_{BA} \cdot A_B = t_{SB} \cdot \pi \cdot D_B \tag{5.23}$$

The location of the neutral axis from tension point and compression point respectively are established as:

$$L_1 = \frac{D_B}{2} \cdot \left[\frac{(\pi - \alpha)\cos^2 \alpha + ((3 \cdot \sin \alpha \cdot \cos \alpha)/2) + (\pi - \alpha)/2}{(\pi - \alpha)\cos \alpha + \sin \alpha} \right] \tag{5.24}$$

$$L_2 = \frac{D_B}{2} \cdot \left[\frac{\alpha \cos^2 \alpha - ((3 \cdot \sin \alpha \cdot \cos \alpha)/2) + \alpha/2}{\sin \alpha - (\alpha \cdot \cos \alpha)} \right] \tag{5.25}$$

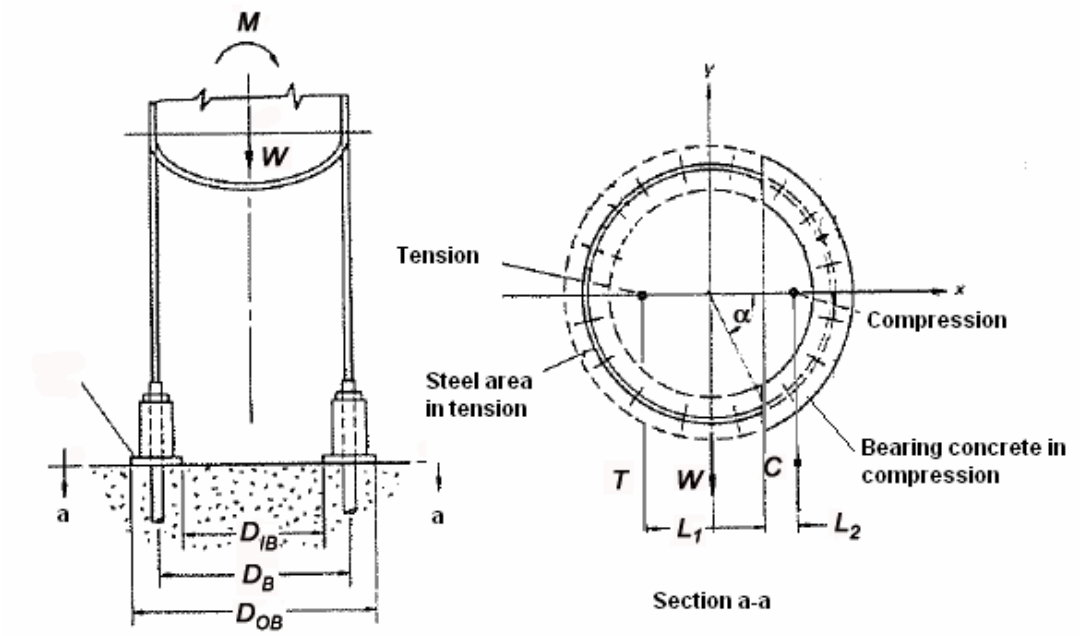

Fig. 5.7 – Approach of complete method with disregarding initial bolt load [6]

where:

$$k = \frac{1}{1 + (S_{T,steel} / n \cdot S_{C,concrete})}$$

$$n = E_{steel} / E_{concrete}$$

$$\alpha = 1 - 2 \cdot k$$

The distances between the points where tensile, compressive, and vertical forces act are:

$$j_1 \cdot D_B = L_1 + L_2 \tag{5.26}$$

$$j_2 \cdot D_B = L_2 + \frac{D_B \cdot \cos\alpha}{2} \tag{5.27}$$

The thickness of the steel replacing the bolt area is found as:

$$t_{SB} = \frac{1}{S_T \cdot D_B} \cdot \left(\frac{M - W_O \cdot j_2 \cdot D_B}{j_1 \cdot D_B} \right) \cdot \left(\frac{1 + \cos\alpha}{(\pi - \alpha) \cdot \cos\alpha + \sin\alpha} \right) \tag{5.28}$$

The bolt area is then yielded as:

$$A_B = \frac{t_{SB} \cdot \pi \cdot D_B}{N_{BA}} \tag{5.29}$$

5.3 – SUPPORT LEGS

Support leg columns are used for shorter vessels of high pressure with large diameters, almost in every wholly spherical vessels containing high density fluids and short vertical vessels. VESSELAID analyzes vessel columns, cross-bracings, and anchor bolts using simplified method.

5.3.1 – Support Leg Columns

Support leg columns are designed to take mainly axial loads and moments, and also shear loads at leg-to-shell welds which have an additional bending effect on the legs. Referring to Fig. 5.8, it is seen that the axial force is carried uniformly by all legs, bending moment by the columns away from the neutral axis, and shear load by the columns closest to the neutral axis, considering the direction of loading.

For column leg A in Fig. 5.8, the total axial load including the effect of bending moment is:

$$F_L = \frac{-W_O}{N_L} \pm \frac{2 \cdot M}{N_L \cdot R_{LC}} \tag{5.30}$$

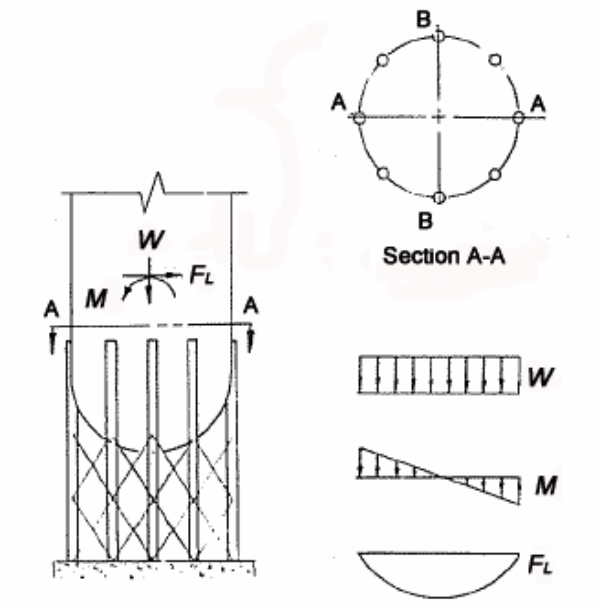

Fig. 5.8 – Support legs and acting forces [3]

The critical case is tension, i.e. the tensile effect of the moment, unless a huge moment creates such a large compressive force to cause buckling of the shorter columns. As the columns used are relatively shorter, buckling and compressive forces are ignored for the column design and taken into account in foundation design phase.

For column B in Fig. 5.8 likely, the additional shear force in substitute of bending moment is given by:

$$F_S = \frac{F_H \cdot Q_C}{I_L \cdot t_{CS}} \tag{5.31}$$

The shearing force F_H at the top of the column B causes an additional bending moment theoretically, which is avoided by using cross-bracings in practice. Cross-bracings (see

Fig. 5.8) increase the compressive stress in the legs, which is majorly carried by the baseplate and the foundation, and decrease the bending moment induced by the shear forces. Additional compressive force does rarely change the design of the column leg, but it usually is the prevailing parameter in the design of the foundation under the column. Referring to Fig. 5.8, it can be seen that the shear force is resolved into two components, radial force on the shell, F_R; and a horizontal force in the plane of the cross-bracing, F_{HC}; which are given by:

$$F_R = \frac{F_H}{\tan \alpha_{XU}} \tag{5.32}$$

$$F_{HC} = \frac{F_H}{\sin \alpha_{XU}} \tag{5.33}$$

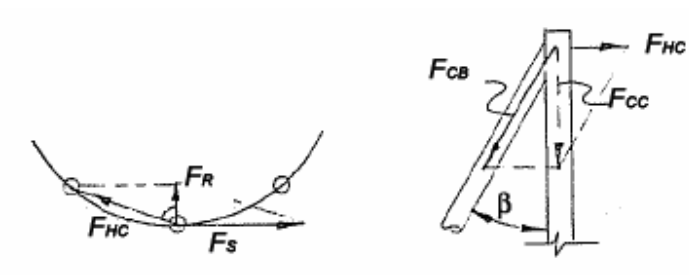

Fig. 5.9 – Cross-bracing forces [3]

The force X introduces an additional compressive force on the column and an axial force on the cross-bracing respectively as:

$$F_{CC} = \frac{F_{HC}}{\tan \beta}, \; F_{CB} = \frac{F_{HC}}{\sin \beta} \tag{5.34}$$

where β is the angle between cross bracing and the column.

The tensile force on the column carrying shear is then:

$$F_L = -\frac{W_O}{N_L} - \frac{F_{HC}}{\tan\beta} \tag{5.35}$$

VESSELAID also checks the stresses in the columns carrying shear and cross-bracings utilizing the above forces.

5.3.2 – Anchor Bolts

Anchor bolts are designed to resist the uplift forces and secure the legs in position. Practically, Simplified Method for the design of anchor bolts for skirts is used for support leg bolts, as given in Eqn (5.14) in the previous section, which is:

$$A_B = \frac{\left(\left(4 \cdot M / D_{BC}\right) - W_O\right)}{N_L \cdot S_{AB}} \tag{5.36}$$

5.4 – LUGS

Support lugs have practically limited use in vertical pressure vessels with small or moderate diameters (0.3 to 3 m) and moderate height-to-diameter ratios (2 – 5). Steel structural frames or columns and concrete bases are utilized for supporting the lugs. It must be noted that lugs are not the preferred type of support for crucially important vessels with design lives relatively over 10 – 15 years [12].

Referring to Fig. 5.10 below, the base plates provide anchor bolt accommodation, and they are analyzed as uniformly loaded rectangular plates with one edge free and other three supported. The gusset plates (two of them are found on a lug) can also be assumed as eccentrically loaded plates, combined stress in one gusset due to the load $F_{LU} / 2$ causes bending stress and combined stress, where F_{LU} is the maximum force on one lug and is given as:

$$F_{LU} = \frac{4 \cdot M}{N \cdot D_C} + \frac{W_o}{N_{LU}} \tag{5.37}$$

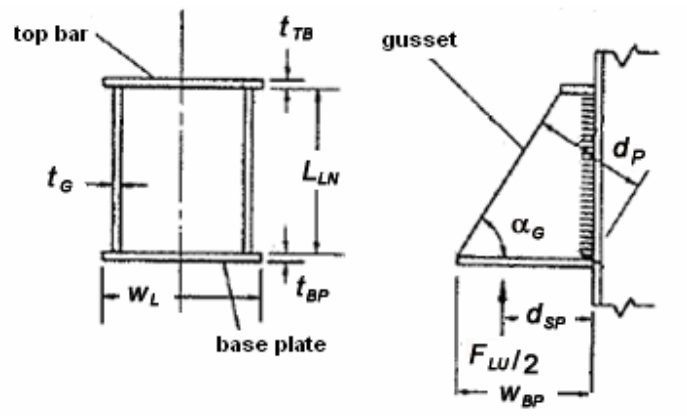

Fig. 5.10 – Lugs

From Fig. 5.10:

$$\frac{F_{LU}}{2} \cdot d_{SP} = \sigma_{GC} \cdot d_{SP} \cdot \sin\alpha_G \rightarrow \sigma_{GC} = \frac{F_{LU}}{2} \cdot \sin\alpha_G \tag{5.38}$$

and the maximum compressive stress in the gusset is:

$$\sigma_{GC,\max} = \frac{\sigma_{GC}}{d_P \cdot t_G} + \frac{6 \cdot \sigma_{GC} \cdot e}{d_P^{\,2} \cdot t_G} \tag{5.39}$$

where $e = \left(d_{SP} - \frac{w_{BP}}{2} \right) \cdot \sin\alpha_G$

The required thickness for the gusset is then derived as:

$$t_G = \frac{F_{LU} \cdot (3d_{SP} - w_{BP})}{S_A \cdot w_{BP}^{\ 2} \cdot \sin^2 \alpha_G} \tag{5.40}$$

As the top bar can be assumed as a simply supported beam with uniformly distributed load of $F_{LU} \cdot d_{SP} / L_{LN}$, the required thickness is derived from the equation:

$$S_B = \frac{6 \cdot M}{t_{TB} \cdot c^2} = \frac{(6 / t_{TB} \cdot c^2)}{F_{LU} \cdot d_{SP} \cdot w_L / 8 \cdot L_{LN}} \rightarrow t_{TB} = \frac{0.75 \cdot F_{LU} \cdot d_{SP} \cdot w_L}{S_b \cdot c^2 \cdot L_{LN}} \tag{5.41}$$

where c = 5 cm minimum and 8 t_{TB} maximum.

The base plate is designed with respect to the maximum force on one lug also, from which the bearing pressure is found as:

$$p_b = \frac{F_{LU}}{w_S \cdot w_L} \tag{5.42}$$

The maximum stress in the base plate which must be smaller than the allowable stress, is then found as:

$$\sigma_{BP} = \frac{\beta \cdot p_b \cdot w_{BP}^{\ 2}}{t_{BP}^{\ 2}} \tag{5.43}$$

where $\beta = c / R_M$ and $c = \frac{\sqrt{(L_{LU} \cdot w_L)}}{2}$

VESSELAID performs stress analysis in the shell in two categories, lugs without stiffening rings, and lugs with full stiffening rings.

5.4.1 - Lugs without Stiffening Rings

The stress in a non-stiffened shell is found by combining the moment of the maximum force on one lug as a bending stress, and internal pressure within the vessel. The maximum bending stress is:

$$\sigma_B = \frac{\gamma \cdot F_{LU}}{t_S^{\ 2} \cdot R_M \cdot \beta} \tag{5.44}$$

where $\gamma = r / t$ and $\beta = c / R_M$

In the analysis, internal pressure is calculated as $P / R_M\ t_S$, and the combined stress is then found as:

$$\sigma_{CS} = \sigma_B + \frac{P}{R_M \cdot t_S} \tag{5.45}$$

which must be smaller than allowable stress in the shell.

5.4.2 - Lugs with Stiffening Rings

The stress analysis of the shell with stiffening rings which are called as *girders* is somehow different from the one without stiffening rings. In this case, stresses in the rings are much more than the shell, and hence, the stress analysis is practically limited with the rings. When the base plate length and top bar length is equal, the rings are called girders, or namely ring girders. Referring to Fig. 5.11, the axial force on one lug can be assumed to be resisted by the shear in welds connecting the gusset plates to the vessel. The moment caused by this force, $W \cdot d_{SP} / 2$, is carried into the rings and causes F, which acts in the plane of ring curvature as:

$$F = \frac{W \cdot d_{SP}}{2 \cdot (L_{LN} + t_{SR})} \tag{5.46}$$

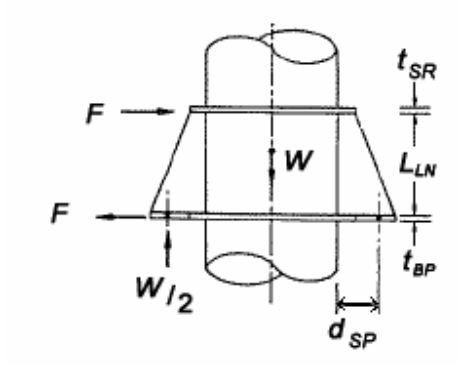

Fig. 5.11 - Girders

Zero loading in the plane perpendicular to the ring curvature is assumed and the force F acts radially outward on the lower ring and radially inward on the top ring. The maximum bending moment caused by these forces is:

$$M_1 = \frac{F \cdot \sigma_{GC} \cdot \left(\frac{1}{\alpha_G} - \cot\theta_L \right)}{2} \tag{5.47}$$

where 2θ = angle between lugs.

In addition to the bending moment, an axial thrust force is induced in the ring at the support points as:

$$T_1 = \frac{P \cdot \cot\theta_L}{2} \tag{5.48}$$

The resulting stress at the load points is then:

$$\sigma_{1U} = \frac{T_1}{w_L} + \frac{M_1}{Z_R} \tag{5.49}$$

The bending moment at midpoints between the loads is also:

$$M_2 = \frac{F \cdot \sigma_{GC} \cdot \left(\frac{1}{\sin\theta_L} - \frac{1}{\theta_L} \right)}{2} \tag{5.50}$$

and the axial thrust force:

$$T_2 = \frac{P}{2 \cdot \sin\theta_L} \tag{5.51}$$

The resulting combined stress in between support points is then:

$$\sigma_{2U} = \frac{T_2}{w_L} + \frac{M_2}{Z_R} \tag{5.52}$$

VESSELAID checks σ_{1U} and σ_{2U} with respect to allowable stresses of ring material.

5.5 – SADDLES

One of the most important concepts in designing horizontal vessels is the concept of supports. Horizontal vessels are always supported by two saddles if they are located aboveground. The analysis of saddles, which has been developed by L. P. Zick [7], is more complicated than any other support structure, providing the fact that two saddles is the optimum number of supports that must be used for horizontal vessels. VESSELAID includes the analysis of numerous stresses that are imposed by saddles and various components of saddles which can be seen in Fig. 5.12.

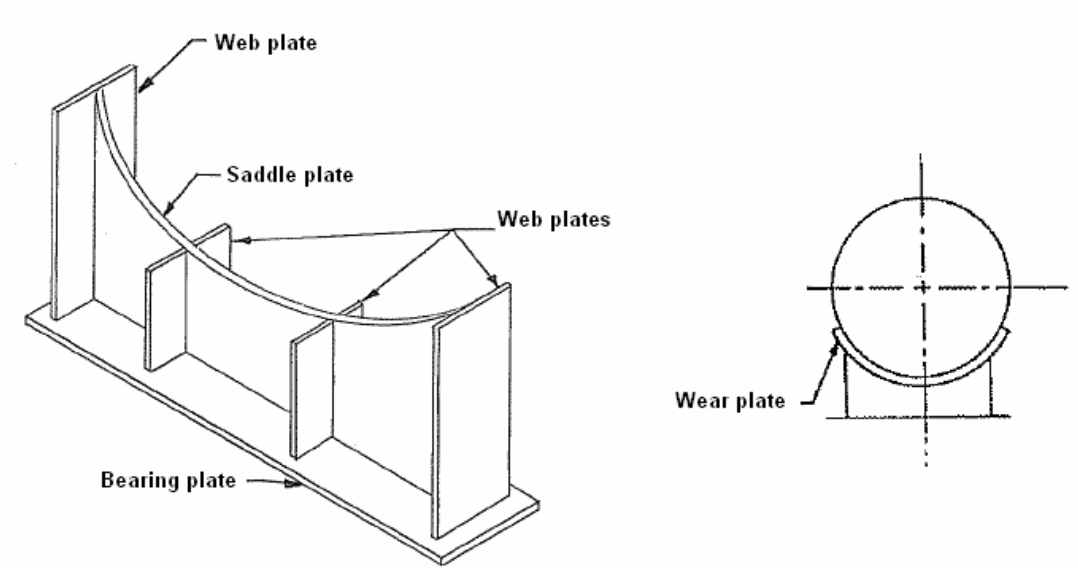

Fig. 5.12 – Saddle components that is included in VESSELAID [6]

5.4.1 – Stresses Imposed on the Shell and Head

Longitudinal Bending Stresses

A horizontal vessel supported on two beams can be approximated as a beam overhanging two supports and the related bending moment diagram can be drawn (see Fig. 5.13), which is the key to Zick's Analysis. The maximum longitudinal bending stresses, hence occur at the saddles and the midspan, i.e. the center of the vessel. At the saddle, the longitudinal bending stress, σ_1, is:

$$\sigma_1 = \frac{3 \cdot Q \cdot h_T}{\pi \cdot R_M{}^2 \cdot t_S} \cdot \left[\frac{4 \cdot d_H}{h_T} \cdot \left(1 - \frac{1 - \frac{d_H}{h_T} + \frac{R_M{}^2 - H^2}{2 \cdot d_H \cdot h_T}}{1 + \frac{4 \cdot h_H}{3 \cdot h_T}} \right) \right] \cdot \left[\frac{\pi \cdot \left(\frac{\sin \Delta}{\Delta} - \cos \Delta \right)}{\Delta + \sin \Delta \cdot \cos \Delta - 2 \frac{\sin^2 \Delta}{\Delta}} \right]$$

(Eqn. 5.53)

where $\Delta = \frac{\pi}{180} \cdot \left(\frac{5 \cdot \theta_S}{12} + 30 \right)$

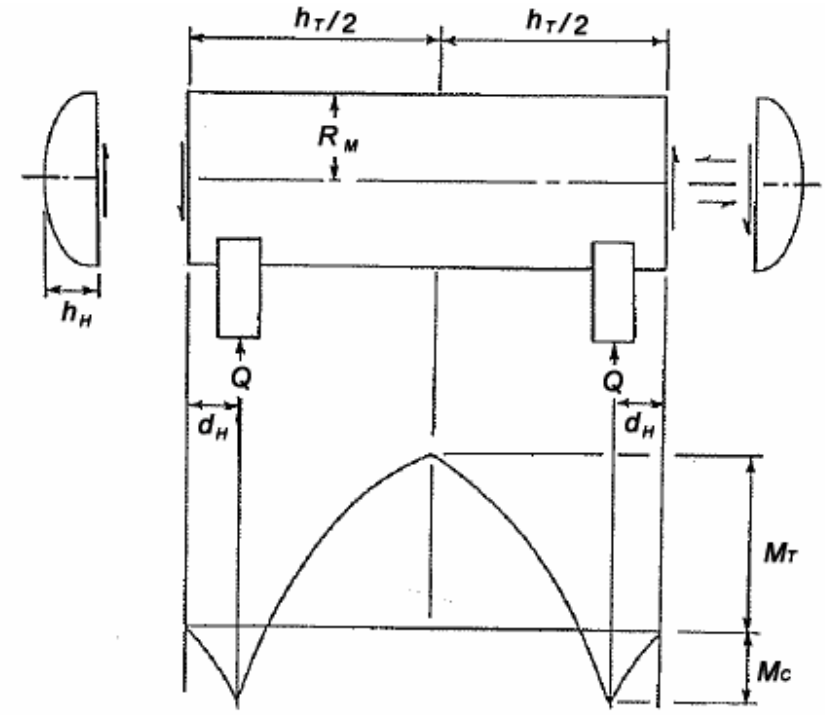

Fig. 5.13 – Zick's bending moment diagram [5]

The following requirements should be met:

- For tension:

$$\sigma_1 + \sigma_2 \leq E_{long} \cdot S_T \tag{5.54}$$

- For compression regarding buckling, unless $t_S / R_M > 0.005$ or external pressure is not present (otherwise, buckling mode does not prevail and no buckling analysis is needed):

$$\sigma_1 \leq \frac{E_S}{29} \cdot \frac{t_S}{R_M} \cdot \left[2 - \left(\frac{200 \cdot t_S}{3 \cdot R_M} \right) \right] \tag{5.55}$$

At the mid-span, the above limitations apply to the longitudinal bending stress at the midspan, indicated by σ_2, which is defined as:

$$\sigma_2 = \frac{3 \cdot Q \cdot h_T}{\pi \cdot R_M{}^2 \cdot t_S} \cdot \left[\frac{\dfrac{1 + 2 \cdot \dfrac{R_M{}^2 - h_H{}^2}{h_T{}^2}}{h_T{}^2}}{1 + \dfrac{4 \cdot h_H}{3 \cdot h_T}} - \frac{4 \cdot d_H}{h_T} \right] \tag{5.56}$$

Location of longitudinal bending stresses can be seen in Fig. 5.14 below.

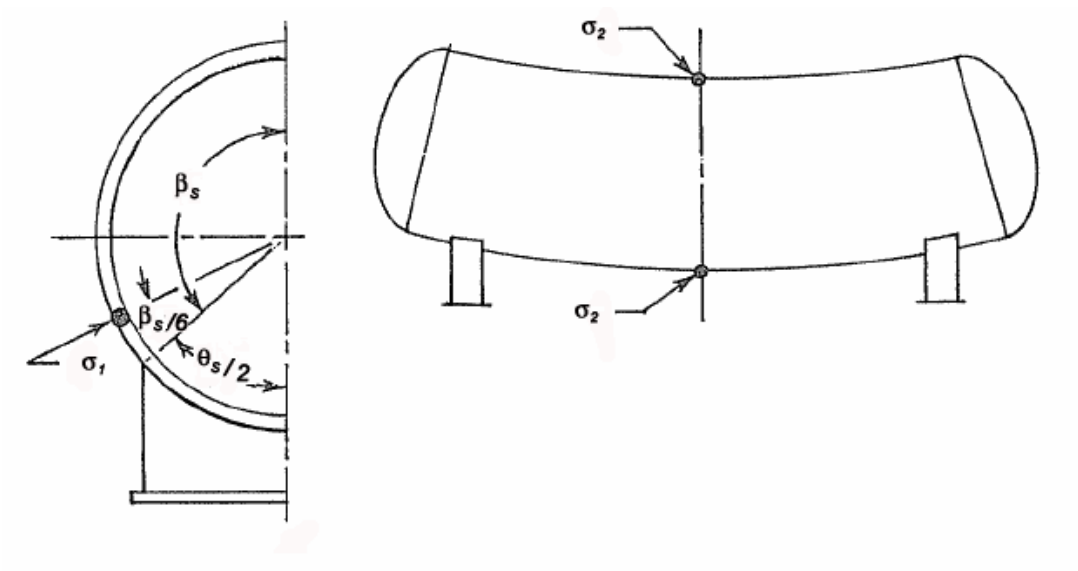

Fig. 5.14 – Longitudinal bending stresses

<u>Tangential Shear Stresses</u>

Shear stresses are analysed in the shell regarding whether they are stiffened or not. In most of the cases, the shell is assumed to be stiffened by the head, when $d_H \leq R_M$. The shell may also be stiffened with internal or external stiffening rings.

- For shell stiffened by ring in the plane of saddle:

$$\sigma_3 = \frac{0.318 \cdot Q}{R_M \cdot t_S} \cdot \left(\frac{h_T - 2 \cdot d_H - h_H}{h_T + h_H} \right) \leq 0.8 \cdot S_{SH} \tag{5.57}$$

- Unstiffened shell with saddles away from the head:

$$\sigma_4 = \frac{Q}{R_M \cdot t_S} \cdot \left(\frac{h_T - 2 \cdot d_H - h_H}{h_T + h_H} \right) \cdot \left(\frac{\sin \alpha}{\pi - \alpha + \sin \alpha \cdot \cos \alpha} \right) \leq 0.8 \cdot S_{SH} \tag{5.58}$$

where $\alpha = \pi - \frac{\pi}{180} \cdot \left(\frac{\theta_S}{2} + \frac{\beta_S}{20} \right)$ and where θ_S, β_S in degree's.

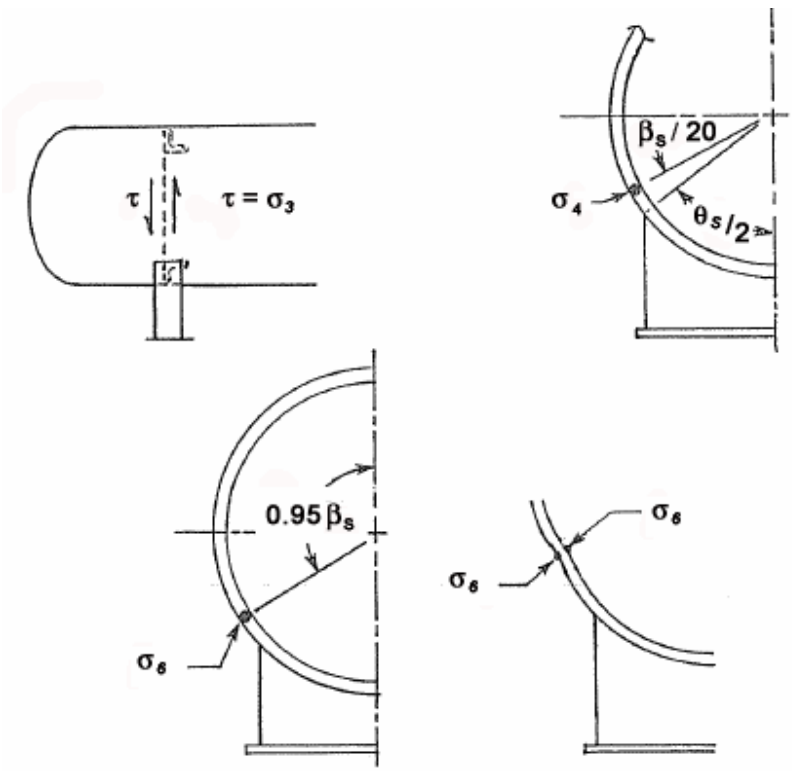

Fig. 5.15 – Tangential shear stresses

- Shell stiffened by the head:

$$\sigma_5 = \frac{Q}{R_M \cdot t_S} \cdot \left(\frac{\sin\alpha}{\pi} \cdot \frac{\alpha - \sin\alpha \cdot \cos\alpha}{\pi - \alpha + \sin\alpha \cdot \cos\alpha} \right) \leq 0.8 \cdot S_{SH} \tag{5.59}$$

$\sigma_6 = \sigma_5 \leq 0.8 \cdot S_{SH}$, where σ_6 occurs in the head.

The locations of tangential shear stresses are as seen in Fig. 5.15 above.

<u>Additional Stresses</u>

For shell stiffened by the head, circumferential compressive stress at horn of saddle occurs as:

$$\sigma_7 = \frac{-Q}{4 \cdot t_S \cdot \left(w_W - 1.56 \cdot \left(R_M \cdot \sqrt{t_S}\right)\right)} - \frac{3 \cdot K_6 \cdot Q}{2 \cdot t_S^{\,2}} \quad \text{for } h_T >= 8R_M$$

$$\sigma_7 = \frac{-Q}{4 \cdot t_S \cdot \left(w_W - 1.56 \cdot \left(R_M \cdot \sqrt{t_S}\right)\right)} - \frac{12 \cdot K_6 \cdot Q \cdot R_M}{h_T \cdot t_S^{\,2}} \quad \textit{for } h_T < 8R_M \tag{5.60}$$

where;

$K_6 = 0.4222 \cdot e^{-0.0177\theta}$ for $d_H / R_M > 1$,

$K_6 = \dfrac{0.4222 \cdot e^{-0.0177\theta}}{4}$ for $d_H / R_M < 0.5$,

$$K_6 = \frac{1}{\pi} \cdot \left[\frac{\beta \cdot \sin\beta}{2} - \frac{\sin\beta}{\beta} \cdot \cos\beta + \frac{\sin\beta}{\beta} + \left(\frac{\cos\beta - \frac{\sin\beta}{\beta}}{4} \right) \cdot \left(\frac{4 - 6 \cdot \left(\frac{\sin\beta}{\beta}\right)^2 + 2 \cdot \cos^2\beta}{\frac{\sin\beta \cdot \cos\beta}{\beta} + 1 - 2 \cdot \left(\frac{\sin\beta}{\beta}\right)^2} \right) \right]$$

for other cases.

In any case, $\sigma_7 \leq 1.5 \cdot S_T$.

Additional stress in the head occurs when head is used as stiffener, which is given below:

$$\sigma_8 = \frac{-Q}{8 \cdot R_M \cdot t_H} \cdot \left[\frac{\sin^2 \alpha}{\pi - \alpha + \sin \alpha \cdot \cos \alpha} \right] \leq 1.25 \cdot S_T \tag{5.61}$$

<u>Ring Compression in Shell over Saddle</u>

The compressive force as seen in Fig. 5.16 between the shell and saddle components is found if a frictionless contact between them is assumed as:

$$\sigma_9 = \frac{Q}{t_S \cdot \left(w_w + 1.56 \cdot (R_M \cdot t_S)^2 \right)} \leq 0.5 \cdot S_{YP} \tag{5.62}$$

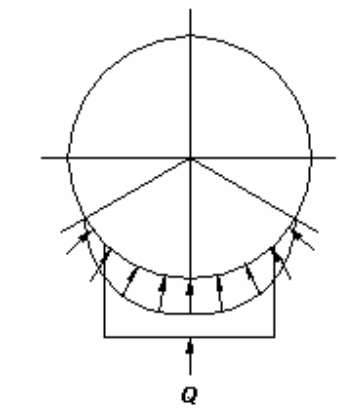

Fig. 5.16 – Ring compression over saddle

5.4.2 – Wear Plate Design

Wear plate need is one of the first things when horizontal vessels on saddles are designed. However, in practice, wear plates are utilized without checking the

requirement for them, which may cause a considerable labour and material expense unless they are really needed.

Wear plates are not required if the below criteria that VESSELAID utilizes are met:

- $\sigma_7 \leq 1.5 \cdot S_T$
- $\sigma_9 \leq 0.5 \cdot S_{YP}$

It should be noted that wear plates must be used any way in highly seismic regions to minimize stress concentrations at the junctions between saddle plate and shell.

5.4.3 – Saddle Plate Design

Saddle plates are subjected to local buckling as a result of bending, compression, shear, or a combination of these. In practice, stiffening rings and web plates can be used for strengthening of saddle plates. The analysis is mainly based on flat plate theory, about which the lack of knowledge in the past had provided over-designed saddle plates. The critical buckling stress equation included in VESSELAID for saddle plates is:

$$\sigma_{CR} = \frac{K_i \cdot \pi^2 \cdot E_{SP}}{12 \cdot \left(1 - \nu^2\right) \cdot \left(\frac{L_{SN}}{t_S}\right)^2} \tag{5.63}$$

where K_i is a factor based on the effective area that resists buckling in the saddle plate. The criterion of saddle plate failure is based on that buckling strength of the plate must be greater than the induced buckling stress, which is:

$$\sigma_{B,CR} = S_Y - \frac{S_Y^{\ 2}}{4 \cdot \sigma_{CR}} \tag{5.64}$$

5.4.4 – Stiffening Ring Design

Stiffening rings are necessary when the vessel is subjected to external pressure, and they also stiffen the shell in case Zick stresses turn up high. The range of distances between stiffening rings is given by:

$$L_{\min} = 1.56 \cdot \sqrt{R_M \cdot t_S} \text{ and } L_{\max} = R_M \tag{5.65}$$

The stress in the ring is also given by:

$$\sigma_{10} = \frac{-K_7 \cdot Q}{N_S \cdot A_{SR}} + \frac{K_6 \cdot Q \cdot R_M}{N_S \cdot Z_R} \cdot \lambda \tag{5.66}$$

where

$\lambda = +1$ for rings in the plane of saddles, -1 for rings adjacent to saddles.

K_7 can be seen in Table 5.2 with respect to various saddle angles (interpolation and extrapolation is performed in between and outside the range of saddle angles).

Table 5.2 - K_7 coefficient and values for interpolation

K_7	rings in plane of saddles	rings adjacent to saddles
120 ^{o}	0.340	0.271
150 ^{o}	0.303	0.219
180°	0.250	0.140

Z_R is the ratio of moment of inertia of the stiffener ring with respect to an axis which depends on whether the stiffener is in the plane of the saddle or the saddle horn is at tip of flange of the stiffener ring.

In VESSELAID, the criteria for stiffening rings are:

$$\sigma_{10} + B \leq 0.5 \cdot S_Y \qquad \text{, for } \sigma_{10} < 0 \text{ (i.e. ring is in compression)}$$

$$\sigma_{10} + \sigma_P \leq S_T \qquad \text{, for } \sigma_{10} > 0 \text{ (i.e. ring is in tension)} \tag{5.67}$$

5.4.5 – Bearing Plate Design

In VESSELAID, it is possible to design the bearing plate when the foundation is of reinforced concrete or other material. The bearing strength is given by:

$$S_{BC}' = \frac{\phi \cdot \sigma_C' \cdot A_1 \cdot \left(\frac{A_2}{A_1}\right)^{0.5}}{759 \cdot FS_b} \tag{5.68}$$

where A_1 is the smaller area and A_2 is the larger area in [mm^2]'s as defined in Fig. 5.17, and where ϕ is the bearing strength factor which is defined as 0.7 in American Concrete Institute (ACI) 9.3.2.e. The same code takes σ_C', allowable bearing strength as 20.7 MPa. With these values, reinforced concrete foundation design based on ACI Standard 318-77 is as given as:

$$S_{BC}' = \frac{0.0191 \cdot A_1 \cdot \left(\frac{A_1 + 5806.5 + 76.2 \cdot (L_2 + L_1)}{A_1}\right)^{0.5}}{FS_b} \tag{5.69}$$

where

S_{BC}' in [MPa]'s, L_1 and L_2 are defined in Fig. 5.17 and in [mm]'s.

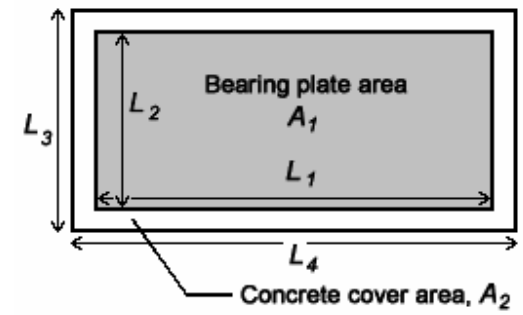

Fig. 5.17 – Bearing plate and concrete cover

VESSELAID also checks the bearing plate thickness according to AISC recommendations on allowable bending stress, which is given as:

$$S_B = \frac{0.75 \cdot Q}{t_{BR}^{\ 2}} \cdot \frac{L_2}{L_1} \tag{5.70}$$

CHAPTER 6:

RELIEF SYSTEMS

6.1 - INTRODUCTION

Pressure relieving devices and systems are definitely necessary features of all enclosed equipment, regardless of them being pressurized or non-pressurized. Pressure relief is a safety precaution which decreases the pressure inside an enclosed system if an overpressure situation arises somehow, and provides safe pressure limits. This precaution gains more and more importance, when the application areas of pressure vessels are considered, as in cases of accidental overpressure situations drastic damage to both human life, nature, and other items in the surroundings can arise catastrophically. Rules regarding the proper design, manufacturing, installation, testing and commissioning of pressure relief systems hence must be stated accurately, and procedures must be followed without a single mistake, as examples of overpressure accidents had occurred in the past causing lots of damage and even casualties.

All of the design procedures of enclosed systems (e.g. gas & steam turbines, closed piping systems, boilers and heat exchangers, storage and processing equipment and so on) utilize related codes for pressure relief system design. ASME-VIII Div.1 states that all vessels to be constructed under its scope must be supplied with pressure relief devices -at least a single pressure relief valve where applicable, irrespective of service, size, environment, pressure, temperature and other variables, in UG-125. Various rules of pressure relief requirements are given from UG-125 to UG-136 in ASME-VIII Div 1 [1].

The relief system design in VESSELAID is mainly based on GPSA's Piping Manual [8], API RP 521 [9]. Wherever necessary, additional codes as ASME-I, API 2510 and NFPA 58 are used for optional design variations, which are also based on [8].

According to API RP 521, all accidental upset conditions must be checked for the proper relief valve system design. Accidental causes of overpressure situations may vary from system to system, considering service, control system, probability of human bias, and so on. Below are listed the situations referred in API RP 521 [9], which may cause overpressure:

- Fire exposure; where vapor generation may cause overpressure in equipments of vapor, liquid, or mixed phase service (see Section 6.3.1 – Fire Exposure, for detailed discussion)
- Thermal expansion; where sudden changes in temperature due to solar radiation and atmospheric temperature may cause a change in the entire heat input of the system and overpressure. Too low temperatures at cold sides of heat exchanging equipment may also cause huge temperature difference and hence thermal load may increase (see Section 6.3.2 – Thermal Expansion, for detailed discussion)
- Discharge blockage; where the outlet path or nozzle of an equipment is blocked by any means and relief load is the maximum flow that the equipment produces (e.g. pump or compressor capacity).
- Tube Failure; where a large ratio of tube to shell pressure of an exchanger of equipment (high pressure side being the tube side and low pressure side being the shell side) may cause tube side fail and cause overpressure in the shell. Tubes are allowed to fail but shell is the critical item here, and must safely be protected.
- Utility failure; where power or similar utility shut-off may cause overpressure in the system.

- Control valve failure; where the malfunctioning of the valves controlling temperature / pressure of the critical system may cause a sudden increase in the pressure.

During the design of the system against accidental situations, it is assumed that above conditions do not occur simultaneously (a.k.a. “double-jeopardy”), and the dominant and most critical one is used to determine the relief system.

Relief devices within the scope of ASME-VIII Div. 1 include spring-loaded direct acting relief valves (conventional and balanced types available), pilot operated relief valves, and rupture discs. Devices in the scope of ANSI B31.3 and B31.8, ASME-I are different than those above.

6.2 – SIZING OF RELIEF SYSTEMS AND RELIEVED FLUIDS

According to variations in design, service, location, layout of plant and many factors like that, flow capacity (sometimes referred as *relief capacity*) is determined, generally by industrial practice. Relief device design then is continued by determining the necessary orifice area, method of which will be discussed in this and forthcoming sections. Standardized orifice areas and designations are used in industrial applications, chosen as the next larger area available than the designed area; and available inlet and outlet diameters of the relief valves can then be determined (see Table 6.1 – Standard Orifice Diameters, Designtaions, and Relief Valve Sizes). Non-standardized orifice areas are also possible in the industry, for which the innovative manufacturers in the sector should be consulted for designs requiring much smaller or larger orifice areas than seen in Table 6.1.

Relief valve allowable pressure (or MAOP as an abbreviation for *maximum allowable operating pressure* in VESSELAID) is the most important parameter in the design of the system, which determines the limit which relief device starts to operate and the

system is considered as overpressurized. Relief valve allowable pressure is the sum of MAOP of the system (referred as set pressure) and the margin of allowable relief pressure. This margin is usually given in percentage with respect to the set pressure. Fig. 6.1 summarizes relief valve allowable pressure selection due to vessel requirements. In any case, the relief valve pressure rating does not exceed 121% of set pressure (i.e. maximum pressure margin being 21% of set pressure).

		Area	Available valves (Inlet and outlet diameters in Nominal inches)										
		(cm^2)	1x2	1.5x2	1.5x2.5	1.5x3	2x3	2.5x4	3x4	4x6	6x8	6x10	8x10
Standard Designation	D	0.710	√	√	√								
	E	1.265	√	√	√								
	F	1.981	√	√	√								
	G	3.245			√	√	√						
	H	5.065				√	√						
	J	8.303					√	√	√				
	K	11.858							√				
	L	18.406							√	√			
	M	23.226								√			
	N	28.000								√			
	P	41.161								√			
	Q	71.290									√		
	R	103.226									√	√	
	T	167.742											√

Table 6.1 – Standard Orifice Diameters, Designtaions, and Relief Valve Sizes

VESSELAID's relief system design is based on two types of vessels according to their purpose. The first one is used when the user knows the flow capacity, which is the scenario for pressurized vessels that has a flow balance as heat exchangers, scrubbers, steam traps, flow straigtheners, and so on. The required orifice area is found with respect to 3 different vessel content:

- Gas / Vapor (see Section 6.2.1 for detailed discussion)

- Liquid (see Section 6.2.2 for detailed discussion)
- Steam (see Section 6.2.3 for detailed discussion)

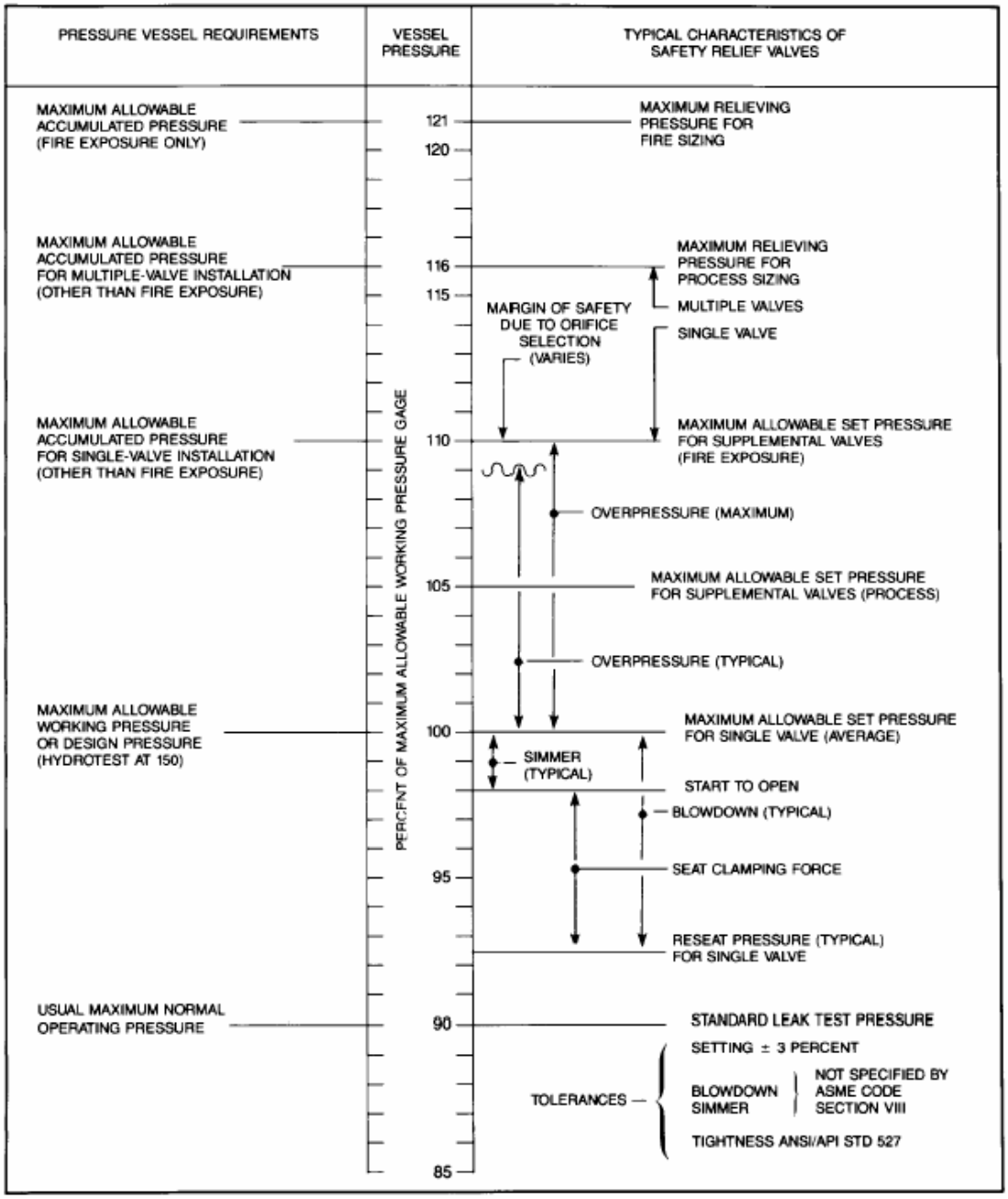

Figure 6.1 – Main Pressure Requirements of Relief Devices with respect to Vessel Service [9]

The second one assumes that the relief capacity is determined by fire exposure (see Section 6.3.1) or thermal expansion (see Section 6.3.2), where the flow is not known but characteristic parameters of vessel content and environmental parameters of vessel are specified, which are scenarios that must be applied to vessels of storage purpose with steady fluids inside. VESSELAID then chooses a standardized orifice, and suggests available valve body inlet / outlet sizes accordingly. Design with respect to fire exposure utilizes the equations developed for gas / vapor relief, whereas liquid relief procedure is applied for thermal expansion.

6.2.1 – Gas / Vapor Relief

According to design with respect to gas / vapor relief, the rate of flow is not a function of downstream pressure, provided that the flow is critical, i.e. downstream pressure, P_2, is less than the critical-flow pressure, P_{CF}. Elsewise, the flow is considered as sub-critical. The perfect gas relationship defines the critical pressure P_{CF} as:

$$P_{CF} = P_1 \cdot \left(\frac{2}{k+1} \right)^{k/(k-1)} \qquad \text{Eqn. (6.1)}$$

In cases of critical flow, the minimum required valve discharge area (minimum required orifice area that is to be rounded to the next larger standard orifice area), A_O, can be found in [cm^2]'s by utilizing either Eqn. (6.2) or Eqn. (6.3) recommended by GPSA [8], the former utilizing mass flow rate and the latter utilizing volumetric flow rate.

$$A_O = \frac{100 \cdot Q_M \cdot \sqrt{T_1 \cdot Z}}{C_{HR} \cdot K_B \cdot P_1 \cdot K_M \cdot \sqrt{MW}} \qquad (6.2)$$

$$A_O = \frac{100 \cdot Q_V \cdot \sqrt{T_1 \cdot Z \cdot MW}}{22.4 \cdot C_{HR} \cdot K_M \cdot P_1 \cdot K_B} \qquad (6.3)$$

If K_M is not available directly from the valve manufacturer, a value of 0.975 is recommended for preliminary design. K_B, which is dependent on backpressure, can be obtained utilizing Fig. 6.2. It must be noticed that this figure is valid for conventional relief valves, and it must be taken as unity in case of a balanced safety valve usage, design of which is not dependent on backpressure. C_{HR} is also given as;

$$C_{HR} = 387 \cdot \sqrt{k \cdot \left(\frac{2}{k+1}\right)^{\left(\frac{k+1}{k-1}\right)}} \tag{6.4}$$

If the flow is sub-critical (if it does not satisfy critical flow conditions), Eqn. (6.5) is used to determine required orifice area.

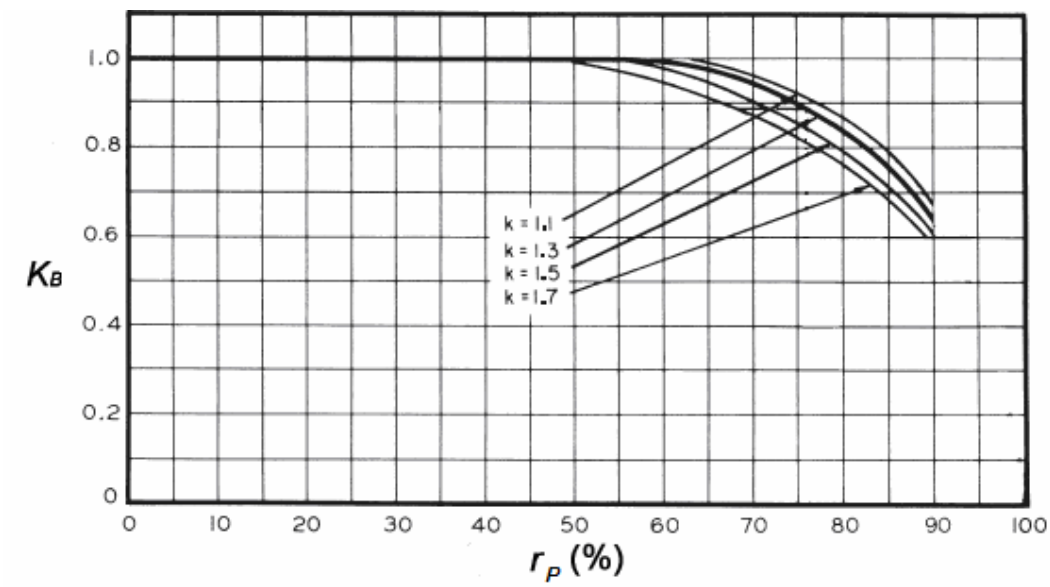

Figure 6.2 – Selection of K_B (capacity correction factor with respect to backpressure in gas/vapor systems) [8]

$$A_O = \frac{100 \cdot Q_M \cdot \sqrt{T_1 \cdot Z}}{548 \cdot C_{SF} \cdot K_M \cdot \sqrt{MW \cdot P_1 \cdot (P_1 - P_2)}} \tag{6.5}$$

where;

$$C_{SF} = \left[\left(\frac{k}{k-1} \right) r_P^{(2/k)} \left(\frac{1 - r_P^{((k-1)/k)}}{1 - r_P} \right) \right]^{0.5} \tag{6.6}$$

6.2.2 – Liquid Relief

VESSELAID calculates the required orifice area for liquid relief, assuming the flow is turbulent. The reasoning behind this assumption is, in almost every case, relief design with respect to turbulent liquid flow is more conservative than it is with respect to laminar liquid flow, and turbulent flow is much more likely to occur in case of relief requirements. In any case, design with respect to laminar flow utilizes the principles of turbulent flow with an additional iterative process which disregards viscosity correction, and then takes it into account by calculating Reynolds number. The orifice are for turbulent liquid flow is given by Eqn. (6.7) as:

$$A_O = \frac{100 \cdot Q_M \cdot \sqrt{T_1 \cdot Z}}{K_M \cdot K_P \cdot K_W \cdot K_V \cdot \sqrt{(P_1 - P_2)}} \tag{6.7}$$

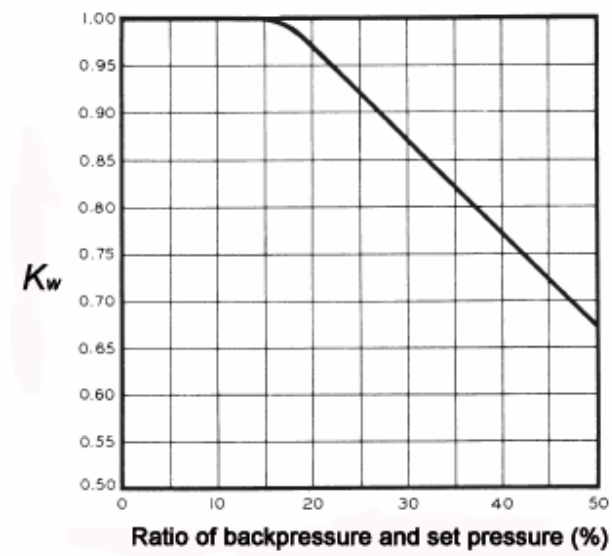

Figure 6.3 – Selection of K_w (capacitiy correction factor with respect to backpressure) [8]

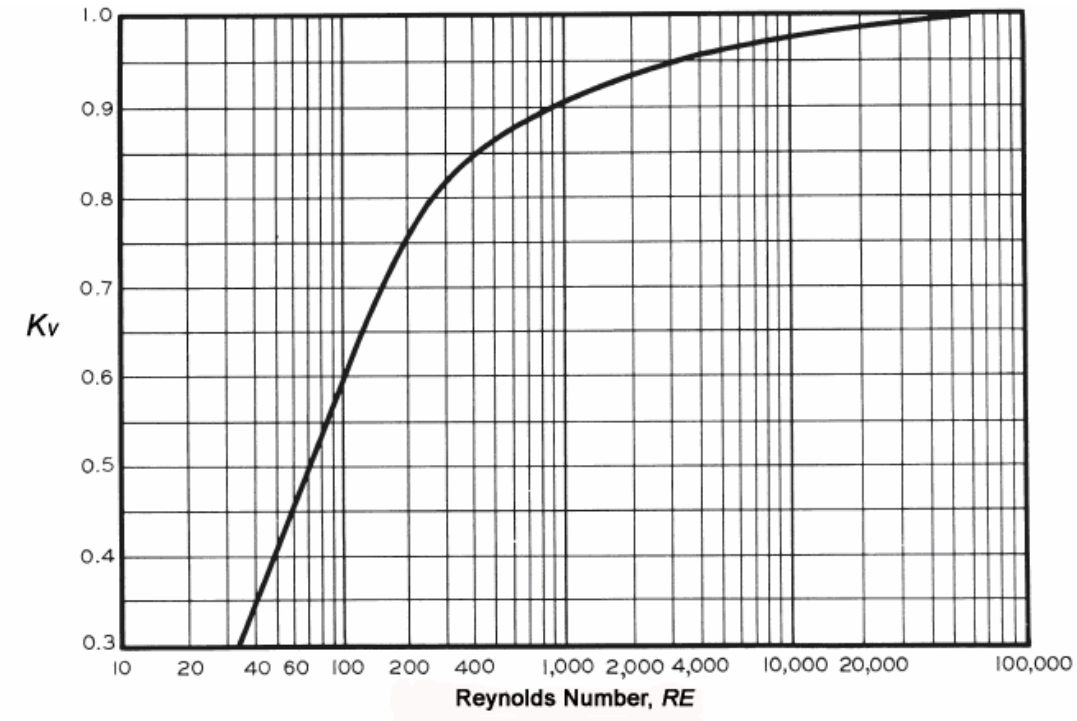

Figure 6.4 – Selection of K_v (capacitiy correction factor with respect to viscosity) [8]

6.2.3 – Steam Relief

The theory behind steam relief depends back to Napier's steam flow formula [8], and uses a correction factor, K_{SH}, for superheated steam relief. VESSELAID performs the design with respect to two different codes, i.e. ASME-VIII Div. 1 (Eqn. (6.8)) and ASME-I (Eqn. (6.9)).

$$A_O = \frac{1.904 \cdot Q_M}{K_M \cdot P_1 \cdot K_{SH}} \tag{6.8}$$

$$A_O = \frac{2.115 \cdot Q_M}{K_M \cdot P_1 \cdot K_{SH}} \tag{6.9}$$

6.3 – SPECIAL CASES: FIRE EXPOSURE AND THERMAL EXPANSION

6.3.1 – Fire Exposure

Design of almost every process or industrial plant is performed or verified according to fire exposure. The severity and conservativeness of safety precautions and factors are dependent on factors like equipment, operating content, location, strategical importance of the plant, noting that nowadays very strict regulations are applied on even small, isolated, non-critical plants. Fire is practically accepted as the condition that defines the specifications regarding the pressure ratings of the system, unless a sudden explosion without propagation of fire is possible. In Fig. 6.1, it can also be seen that the system should be designed for an overpressure of 21% for fire exposure.

VESSELAID utilizes empirical formulas given by NFPA 58 and API 2510, both which are valid for LPG (propane and butane) systems (systems where relief system is entirely designed with respect to fire), the difference lying in the fact that the former is a more general design code whereas the latter is used in the design of marine and pipeline terminals where vapor generation from the liquid transported is high. These codes are based on design with respect to gas / vapor systems, where the flow rate is found according to the wetted surface or outside surface of the vessel to be relieved and environmental conditions.

The volumetric flow rate for fire relief design in NFPA 68 is given in terms of the rate of discharge air, Q_A, and is only dependent upon the total outside surface area of the vessel as:

$$Q_A = 639.4 \cdot A_{CV}{}^{0.82} \tag{6.10}$$

The design formula of API 2510, on the other hand, is dependent on the wetted surface area of the relieved container, and the environmental condition of that container which is implemented as a coefficient, C_{FE} (see Table 6.2); together with a service coefficient, C_{SC}, the minimum of which is taken as 0.6, in case the container is larger than 454 m^2 and the facility has good drainage and fire-fighting capabilities. The empirical equation of API 2510 is also given in terms of the rate of discharge air:

$$Q_A = 639.4 \cdot C_{FE} \cdot C_{SC} \cdot A_W^{\ 0.82} \tag{6.11}$$

Table 6.2 – Selection of C_{FE} for Fire Exposure Relief Sizing [2]

Environment	C_{FE}
Bare metal vessel	1
Insulation thickness (mm):	
25	0.3
50	0.15
100	0.075
150	0.05
200	0.037
250	0.03
300 or more	0.025
Concrete thickness (mm)	Double above
Water application facilities	1
Depressuring and emptying facilites	1
Underground storage	0
Earth-covered storage above grade	0.03

After the determination of flow in terms of volumetric flow rate of air, same procedure to find the required minimum orifice area in gas/vapor relief applies, the flow rate being Q_A.

6.3.2 – Thermal Expansion

The equation used in VESSELAID for thermal expansion relief is same as relief systems liquid flow in turbulent flow, except the flow rate is dictated by liquid expansion coefficient, C_{LE}; relative density of gas referred to air, G; heat input, Q_H; and specific heat, C_{SH}:

$$Q_V = \frac{C_{LE} \cdot Q_H}{1000 \cdot G \cdot C_{SH}} \tag{6.12}$$

CHAPTER 7:

PRESSURIZED HEAT EXCHANGER UTILITIES

7.1 – INTRODUCTION

Heat transfer equipment are widely used in industrial and residential applications. Boilers, evoporators, steam generators, condensers in industrial facilities; air conditioners in residential applications are examples of heat transfer eqiupment. Indeed, all heat exchangers are pressure vessels with specialized components inside – for instance, the outer shell of a heat exchanger can be designed with ASME Section VIII, as they can be treated as pressurized vessels. Generally tubes and tube bundles are present in heat exchangers, and those are called tubular exchangers and a more specialized association, Tubular Exchanger Manufacturers Association (TEMA) is the authority for the design, manufacturing, testing, commissioning and maintenance of these, whose standards are a bit specialized in that it contains rules and practices regarding the inner portion of the vessel: tubesheets, bellows, baffles, and many other components required for heat transfer. VESSELAID is capable of analysis of tubesheets and bellows, which are the primary required inner accessories of heat exchangers.

TEMA classifies heat exchangers into three categories regarding the severity of the service, namely R (severe), C (moderate severity), and B (general), for which some variations regarding the design, manufacturing and testing are present. Corrosion allowance, shell diameter, baffle thickness, minimum bolt size and some other parameters vary according to this classification.

7.2 – TUBESHEET DESIGN

Tubesheet design has an important place in the mechanical design of heat exchangers. The thermal sizing and mechanical conformity, as well as economical aspects are related with tubesheet design. A sample pattern of a tubesheet is seen in Fig. 7.1.

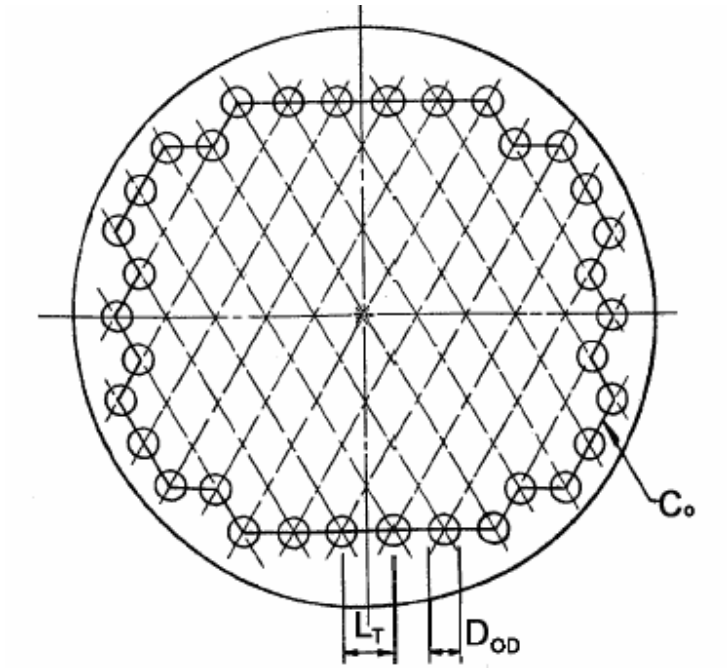

Figure 7.1 – Sample tubesheet pattern in a cylindrical shell [3]

VESSELAID allows two different methods for the design of tubesheets:

- TEMA design method
- ASME design method

The basis for TEMA method is the relationship between the radius of curvature and deflection of a circular plate and the moment expression for a uniformly loaded plate that is derived from the former. The stress equation then comes as:

$$\sigma_{ET} = \frac{C_1 \cdot P_{HE} \cdot R_{PP}^{\ 2}}{t_{TS}^{\ 2}} \tag{7.1}$$

where C_1 is 1.24 for a simply supported plate and 0.75 for a fixed plate.

Thickness can then be found as:

$$t_{TS} = \frac{D_{TS}}{2} \cdot \sqrt{\frac{C_1 \cdot P_{HE}}{C_2 \cdot S_{TS}}} \tag{7.2}$$

TEMA equation is based on a C_2 of 0.77, and a modification to the factor C_1, and is given as:

$$t_{TS} = \frac{D_{TS} \cdot C_{TS}}{2} \cdot \sqrt{\frac{P_{HE}}{S_{TS}}} \tag{7.3}$$

The shear stress caused by applied pressure in the tubesheet at the outer tube surface must be also be checked, and the thickness required for shear stress consideration, with the fact that TEMA assumes $S_{STS} = 0.8 \cdot S_{TS}$, is given as:

$$t_{TS} = \frac{0.31 \cdot D_G}{1 - (d_o / p)} \cdot \left(\frac{P_{HE}}{S_{TS}} \right) \tag{7.4}$$

where;

$$D_G = \frac{4 \cdot A_{TS}}{C_O}$$

VESSELAID's tubesheet design according to TEMA includes both applied pressure and shear stress considerations.

The basis for ASME method is the paper of Gardner and his studies [4], which described the interaction between the tubes and tubesheets in U-tube heat exchangers. He found a moment expression which is then used to determine tubesheet thickness regarding the stress equation. The equation is given as:

$$t_{TS} = D_{TS} \cdot f \cdot \left(\frac{P_{HE}}{S_{TS} \cdot \eta} \right)^{0.5} \tag{7.5}$$

where:

$K = R_{TS} / R_{PP}$

$f = 0.556 \cdot K^{C \cdot \ln \eta}$

C = 0.39 for triangular arrangement of tube holes, 0.32 for square arrangement of tube holes.

7.3 – BELLOW DESIGN

Bellows are the most commonly used expansion joints in heat exchangers, i.e. when the expansion is large and pressure is low. The membrane stress in bellows is derived from Fig. 7.2 using the equation of total force due to pressure, which is:

$$F_P = \left[\left(\frac{q_{CP}}{2} \cdot \frac{D_{BS}}{2} \right) + \left(\frac{q_{CD} \cdot q_{CP}}{4} \right) \right] \cdot P_{HE} \tag{7.6}$$

And the total force resisted by the bellow structure is:

$$F_P = S_{1B} \cdot t_B \cdot \left[\left(\frac{\pi \cdot q_{CP}}{4} \right) + \left(q_{CD} - 8 \cdot q_{CP} \right) \right] \tag{7.7}$$

where S_{1B} is the membrane hoop stress, which is then found as:

$$S_{1B} = \frac{\left(D_{BS} + q_{CD}\right) \cdot P_{HE}}{t_B \cdot \left[\left(\pi - 2\right) + \left(4q_{CD} / q_{CP}\right)\right]} \tag{7.8}$$

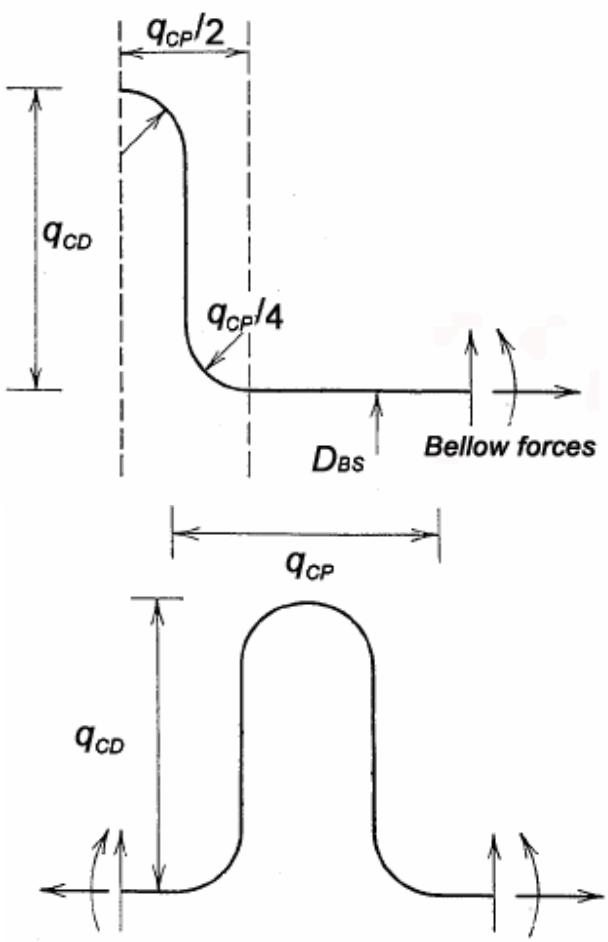

Figure 7.2 – Bellow forces

Similarly, the longitudinal stress is given as:

$$S_{2B} = \frac{P_{HE} \cdot q_{CD}}{2 \cdot t_B} \tag{7.9}$$

The bending stress is found from treating a single convolution as a beam of unit width as shown in Fig. 7.2. The longitudinal bending stress is:

$$S_{3B} = K_1 \cdot \frac{P_{HE} \cdot q_{CD}^{\ 2}}{2 \cdot t_B^{\ 2}} \tag{7.10}$$

If the amount of deflection is available, the longitudinal membrane and longitudinal bending stress are expressed respectively as:

$$S_{4B} = \frac{E_{MB} \cdot t_B^{\ 2} \cdot \delta_B}{2 \cdot q_{CD}^{\ 3} \cdot K_2} \tag{7.11}$$

$$S_{5B} = \frac{5 \cdot E_{MB} \cdot t_B \cdot \delta_B}{3 \cdot q_{CD}^{\ 2} \cdot K_3} \tag{7.12}$$

where K_1, K_2, K_3 are constants and can be assigned from VESSELAID.

CHAPTER 8:

API 650 TANK COMPONENTS

8.1 – INTRODUCTION

Flat bottomed tanks are widely used in the industry for storing low-pressure liquids at near atmospheric conditions. Most of them are used for oil storage (various types of oils as crude, diesel, low or high density, and so on) for energy generation and transportation purposes, and water storage for usage, fire protection and cooling water requirements in industrial plants. API 650 is the code of American Petroleum Institute for design, analysis, mahufacturing, installation and commissioning of welded steel tanks for oil storag". Although AWWA D100 Code had been used for water storage, API 650 is now generally and practically used for that purpose as these two codes are quite similar and closely related, and moreover, API codes could be better adapted internationally.

In VESSELAID, three different component types can be analyzed basically as roofs (cone and roof types), shells (cylindrical), and annular plates. VESSELAID presents a conceptual design of basic parameters for API 650 Tanks, and the code itself should be referred for analysis of more specialized components such as floating roof components, column roofs and nozzles.

8.2 – DESIGN OF CONE AND DOME ROOFS

Large diameter tanks are generally erected with column roofs, i.e. a column carries most

of the roof. However, as the diameter gets smaller, self supporting roofs, majorly cone and dome types are preferred as they are far more economical.

The fundemantal equation for cone roof design comes from the transition piece design under external pressure and collapsing loads according to ASME-VIII Div. 1, and it is:

$$\frac{P_c}{E_R} = \frac{10.4}{FS \cdot \tan(\theta_{RTS})} \cdot \left(\frac{t_{CR} \cdot \sin(\theta_{RT})}{D_{OT}} \right)^{0.25} \tag{8.1}$$

With values generally used within API inserted in this equation, a simpler equation is come up with as:

$$t_{CR} = \frac{D_{OT}}{400 \cdot \sin(\theta_{RT})} \tag{8.2}$$

The horizontal force, F_C, for a loading of P_C is given as:

$$F_C = \frac{P_C \cdot D_{OT}}{4 \cdot \sin(\theta_{RT})} \tag{8.3}$$

The area needed to resist this tensile force is then simply:

$$A_{RC} = \frac{F_C \cdot \left(\frac{D_{OT}}{2} \right)}{S_{TR}} = D_{OT}{}^2 \cdot \left(\frac{P_C}{8 \cdot S_{TR} \cdot \sin(\theta_{RT})} \right) \tag{8.4}$$

The basis for dome roof design is the ASME-VIII Div.1 design basis for ellipsoidal heads under collapse loads. The fundamental equation is:

$$P_D = \frac{0.0625 \frac{FS}{4} \cdot E_R}{\left(\frac{R_{DR}}{t_{DR}}\right)^2} \tag{8.5}$$

The thickness of the dome roof required to resist P_D is found from Eqn. 8.5. A simpler formula that API uses is however:

$$t_{DR} = \frac{R_{DR}}{200} \tag{8.6}$$

From Figure 8.1, the horizontal force is:

$$F_D = N_\phi \cdot \cos(\theta_{RT}) = \frac{P_D \cdot R_{DR}}{2} \cdot \cos(\theta_{RT}) \tag{8.7}$$

The tensile force is applied on an area of:

$$A_{RD} = \frac{F_D \cdot \left(\frac{D_{OT}}{2}\right)}{S_{TR}} = D_{OT}{}^2 \cdot \left(\frac{P_D}{8 \cdot S_{TR} \cdot \sin(\theta_{RT})}\right) \tag{8.8}$$

For tanks with small internal pressure, the maximum internal pressure limit is governed by the uplift criterion in empty condition. Equating the vertical forces:

$$\frac{P \cdot \pi \cdot D_{OT}{}^2}{4} = W_{ST} + W_{RT} \tag{8.9}$$

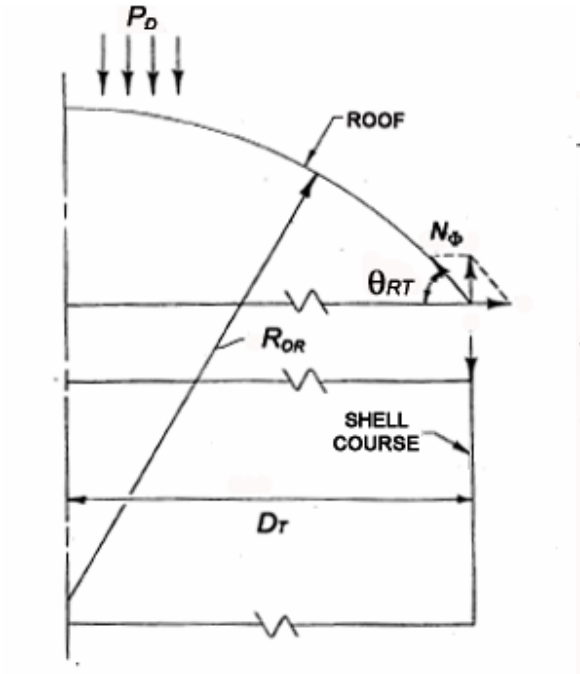

Figure 8.1 – Roof Construction

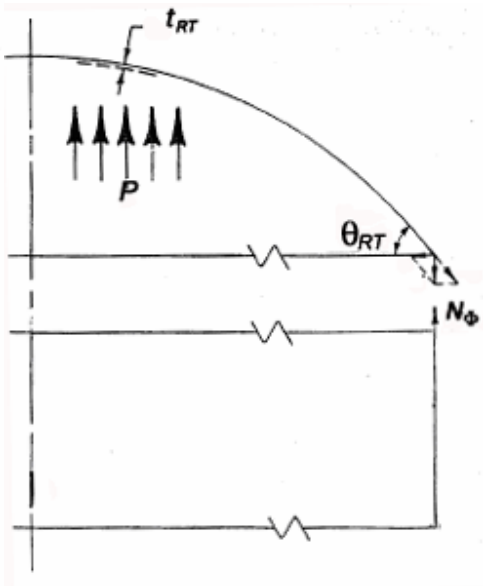

Figure 8.2 – Vertical Forces

Roof-to-shell junction at upift situation must also be checked. From Figure 8.2, the maximum internal pressure that causes the maximum allowable stress at shoof-to-shell juction comes as:

$$P = \frac{8 \cdot A_{RS} \cdot S_{TRS} \cdot \tan(\theta_{RT})}{D_{OT}{}^{2}} + t_{RT} \cdot \gamma \tag{8.10}$$

When the roof-to-shell junction is welded from one side, it is called as a frangible joint and a different approach is utilized for the design and analysis of them. According to API, failure internal pressure for these joints in terms of nominal internal pressure is:

$$P_F = 1.6 \cdot P - 4.8 \cdot t_{RT} \tag{8.11}$$

where P is in mm water column as P_F.

When Eqn. 8.11 is substituted into Eqn. 8.9, maximum internal pressure in case of a frangible joint is found as:

$$P_F = 1.6 \cdot \left(\frac{4}{\pi \cdot D_{OT}^{\ 2}} \right) \cdot \left(W_{ST} + W_{RT} \right) - 4.8 \cdot t_{RT} \tag{8.12}$$

8.3 – DESIGN OF SHELLS

API 650 includes two methods for shell design, as:

- One-foot method
- Variable-point method

The basic thin shell equation from which hoop stress is derived is:

$$\sigma_H = \frac{P \cdot r}{t_S} \tag{8.13}$$

One-foot method assumes that the hydrostatic pressure for design is measured at 1 foot above the lowest point of the shell course. This assumption is based on the fact that a lower and thicker course provides stability and stiffness to the course above, and so does the annular plate to the first course. Hence the maximum stress is foreseen at 1 foot above the point of maximum hydrostatic pressure. Modifying Eqn. 8.13 and adding corrosion allowance, thickness required according to the one-foot method is:

$$t_S = \frac{D_{OT} \cdot \left(H - 304.8 \right) \cdot P}{2 \cdot S_S} + CA \tag{8.14}$$

where H in [mm]'s.

Variable-point can be implemented as an extension of one-foot rule and it calculates a more accurate location for the maximum stress point near the junction of the bottom or shell courses with differing thickness. The bottom course is assumed to be hinged at its junction with the bottom plate. Then the fundemental equation of this method is derived from the fact that the deflection due to internal pressure at the junction is equal to the deflection due to an applied shearing force as shown in Figure 8.3. The thickness required according to this method is:

$$t_S = 1.06 \cdot \frac{2.6 \cdot D_{OT} \cdot H \cdot G}{S_S} + CA \tag{8.15}$$

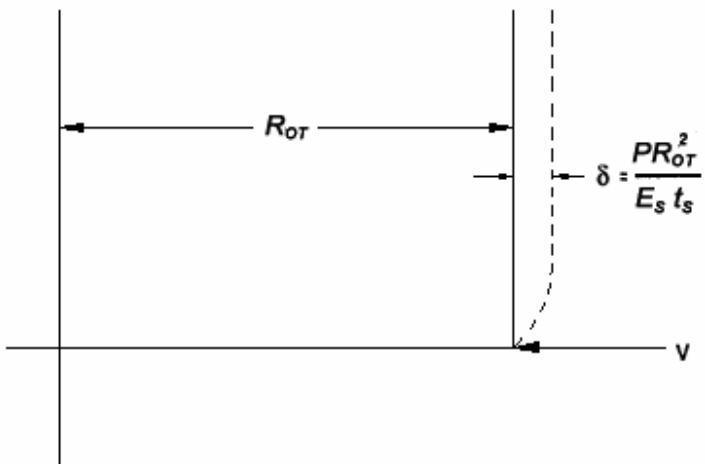

Figure 8.3 – Deflection of a hinged point due to pressure and shear force

Various test have proved that variable-point method is too conservative if shells get stiffened by a aconsiderable amount. Hence, a reduced form of this method, namely "accurate variable-point method" in VESSELAID is used quite often.

According to the accurate variable-point method, the thickness of the first course is given by:

$$t_1 = \left(1.06 - \frac{0.463 \cdot D_{OT}}{H} \cdot \sqrt{\frac{H \cdot G}{S_S}}\right) \cdot \left(\frac{2.6 \cdot H \cdot D_{OT} \cdot G}{S_S}\right) + CA \tag{8.16}$$

The equations for the thickness of the second course varies with the values of tank radius and thickness and height of the first course.

$$t_2 = t_1 \text{ , if } \frac{h_1}{\sqrt{(D_{OT}/2) \cdot t_1}} \leq 1.375 \tag{8.17}$$

$$t_2 = t_{2a} + (t_1 + t_{2a}) \cdot \left[2.1 - \frac{h_1}{1.25 \cdot \sqrt{rt_1}}\right] \text{, if } 1.375 < \frac{h_1}{\sqrt{(D_{OT}/2) \cdot t_1}} \leq 2.625 \tag{8.18}$$

$$t_2 = t_a \text{, if } \frac{h_1}{\sqrt{rt_1}} > 2.625 \tag{8.19}$$

where t_a's are evaluated using Eqn. (8.20) below.

The design of the upper courses is based on the following equation:

$$t_3 = \frac{2.6 \cdot \left(H - \left(\frac{x}{12}\right)\right) \cdot D \cdot G}{S} + CA \tag{8.20}$$

where x is defined as the minimum of x_1, x_2, x_3; which can be interferred from Fig. 8.4 as:

$$x_1 = 0.61 \cdot \sqrt{rt_u} + 0.32 \cdot C \cdot h_u \tag{8.21}$$

$$x_2 = C \cdot h_u \tag{8.22}$$

$$x_3 = 1.22 \cdot \sqrt{rt_u} \tag{8.23}$$

where $C = \dfrac{\sqrt{K_T \cdot (K_T - 1)}}{1 + K_T \sqrt{K_T}}$

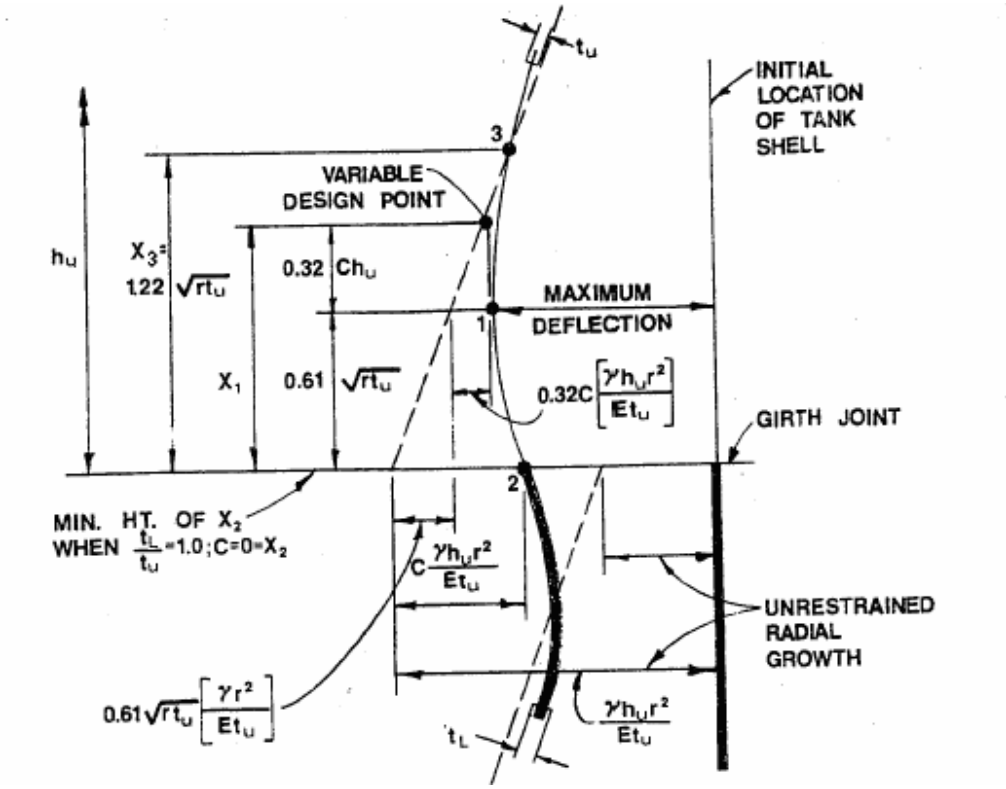

Figure 8.4 – Elastic motion of shell courses [3]

After thickness due to fluid static pressure is determined, stability under wind loads must be checked. The wind loading, in background is complicated as described in Section 4.2, however API 650 tanks are generally designed according to the following formula:

$$q_W = 0.048 \cdot V_{WB}^{\ 2} \tag{8.24}$$

where q_W is in [Pa]'s and V_{WB} is in [km/h]'s.

As the pressure distribution may cause a vacuum on part of the shell, it must be designed to withstand a vacuum pressure of same magnitude. The reduced and simplified equation for buckling of cylindrical shells is given as:

$$P_{CR} = \frac{2.42 \cdot E_S}{\left(1-\mu^2\right)^{0.75}} \cdot \left(\frac{\left(t/D\right)^{2.5}}{H_S/D - 0.45\sqrt{t/D}} \right) \tag{8.25}$$

For long cyliders, the following equation for stiffeners is found substituting 0.3 as Poisson's ratio.

$$H_S = \frac{2.6 \cdot E_M}{P \cdot FS} \cdot \left(\frac{t}{D_{MT}} \right)^{1.5} \cdot t \tag{8.26}$$

Unless the required distance between stiffeners is smaller than the shell height, then no stiffeners are required. If stiffeners are required on the other hand, the section modulus of those are calculated using:

$$Z = 11.11 \cdot \frac{P \cdot H_S \cdot D_{MT}{}^2}{E_{SR}} \tag{8.27}$$

8.4 – DESIGN OF ANNULAR PLATES

Annular plates are connected to concrete base and provide stiffness to the first shell course for the tank. Referring to Fig. 8.4 , the required length for the annular plate is given as:

$$L = \sqrt{\frac{\sigma_Y \cdot t_b^{\,2}}{19.62 \cdot 10^{-9} \cdot G \cdot H}} \tag{8.28}$$

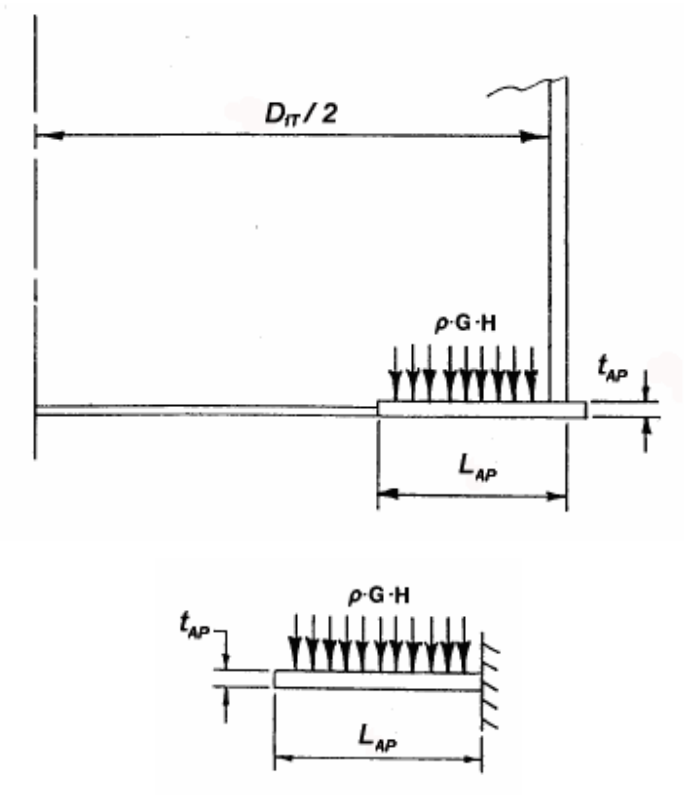

Figure 8.5 – Annular plates and forces exerted on them [3]

Chapter 9:

DISCUSSIONS AND CONCLUSIONS

The contributions of this study to the academic literature and practice as well as to the author, and lessons learned throughout the progress are discussed in this chapter. Recommended future work in parallel with this study's missions, objectives, and approach are also discussed.

VESSELAID, the software which is the main outcome of the study, is a powerful tool when user-friendliness, level of analysis details, variety in design alternatives, and completeness are considered. There are various analysis alternatives for those in the scope of VESSELAID which do not leave open doors. Consideration of the aspects in various ways such that users can decide on the conservativeness and accuracy of the results themselves is also a powerful feature found in the software.

Although numerous commercial pressure vessel softwares are present, only one or two of them which are considered as the most powerful and most integrated are being used by major leading firms of the industry, including complete analyses in all aspects of pressure vessels. However for the supports, which are essential features of pressure vessels which must be analyzed thoroughly, the analyses have never been performed in such a detailed way as performed in VESSELAID. As many softwares lack wind and seismic loading analyses, the commercial ones which can perform those are quite hard to understand and do not bring easy alternatives for the users who do not have a solid knowledge on these issues. VESSELAID, as well as considering the needs of

experienced engineers in this field, also can come up with reliable results for individuals new to the subject, allowing also piping, ladder, and additional loads.

Design of pressure relieving valves is also another feature that has not been implemented within commercial pressure vessel softwares. As essential devices of not only pressure vessels but all enclosed equipment like piping systems, boilers and tanks; relief device analysis shall help the user a lot. Heat exchanger utilities have been included in a few powerful commercial programs, however are implemented as a different module causing integration and interface problems. Heat exchanger and API 650 tank analysis features, although can not be considered as complete tools in VESSELAID, are satisfactory for the needs of design of their critical components rapidly, providing a quick understanding to the work.

Even in powerful softwares that have been reviewed as a part of literature survey, using design features independent from each other is nearly impossible, unlike VESSELAID. For instance a user given the forces acting on a vessel can design the supports; or a user given the required parameters of a vessel present in a piping system can decide on safety devices using VESSELAID, not without even inputting vessel data and without creating it from scratch. Input of only the required parameters is just enough, which is a powerful characteristic of the software.

Although pressure vessels are crucially important, computer-aided design and analysis of them is limited even in Turkey, a country in which engineering potential is gigantic. Either because of their lack of user-friendliness or high price of powerful softwares, experience is relied on and utilized more than computer tools. Not also reliability, but also transfer of knowledge in this case, is also decreased. Very experienced engineers are present in Turkey, whose know-how's and experience should be transmitted to young engineers. However, transfer of knowledge without any auxiliary tool may cause biased interpretation of gathered information. VESSELAID, in this manner, with its

software philosophy, contributes highly to the learning curves of individuals while performing jobs.

This study, discussing the work performed and explaining the basis for VESSELAID, is also quite a nice reference with the variety in subjects it includes, providing solid knowledge in its scope. As VESSELAID has been written in SI units, all the equations, especially correlations dependent on units, had to be converted from Imperial units. This Thesis, hence include SI versions of many correlations that is found in Imperial units in references.

Preparing this study and developing the computer program, VESSELAID, have also contributed to the author in great manners. During his 2-year experience in Technovision Engineering regarding pressure vessel and piping design, BTC Crude Oil Pipeline Project regarding mechanical design and installation of equipment in pump stations, and Çalık Energy's gas turbine power plant construction and installation project in Ashgabat, Turkmenistan; the knowledge gained from this study has provided to be astonishingly advantageous as all these jobs and projects have been donated with pressurized process equipment of which mechanical design and installation works have been performed.

The objective set at the beginning of this Thesis was to prepare an integrated computer-aided engineering tool regarding process equipment design and analysis, together with internal design of system together with external effects and auxiliaries, in SI units. The author believes that the goal had been achieved, but still, there are possible ways to develop even more integrated and complete softwares and to provide additional research to the academic literature. The future work may include vessels of multiple metallurgies notifying that wind, seismic, and support analyses of which would be considerably complicated. Vessel oriented features that have been previously included in similar studies (References [16], [18] and [20]) are external pressure design, nozzle design and material database including treatment features, so with VESSELAID and the

above addition, pressure vessel design and analysis features may wholly be completed, which is quite hard even for professional software developers and for other engineering softwares analyzing items other than pressurized equipment. In case baffles, tubes, and nozzles are added to heat exchanger utilities, together with the tubesheets and bellows design and horizontal vessel features with saddle support analysis found in VESSELAID, mechanical design and analysis of tubular heat exchanger would be complete. Integration of API 650 tank components is also a possible extension way. Of course, regular software options like copying, pasting, visualization of the designed features should be added, which are parts of the software developing works.

With the above extensions, once pressure vessels, API 650 tanks, and tubular heat exchangers are complete, cost estimation and drafting modules may also be added, which would further improve the software from its design and analysis features into a complete package that contributes to all of the phases of a project. Cost estimation module may be quite useful in bidding purposes. Drafting module which may be utilized in manufacturing or installation phases, within itself, must be compatible with technical drawing softwares, requiring an interface. Another possible option regarding interface development is to transfer the data into a finite element software for more complicated analyses utilizing DbA methods in mechanical design.

REFERENCES

1. ASME Boiler and Pressure Vessel Code Section VIII, Divison 1, Pressure Vessels; American Society of Mechanical Engineers; New York; 1998
2. ASCE 7-98 – Minimum Design Loads for Buildings and Other Structures; American Society of Civil Engineers; New York; 1998
3. Structural Analysis and Design of Process Equipment; Jawad, Maan H., Farr, James R.; Wiley, New York; 1989
4. Pressure Vessel Design Handbook; Bednar, Henry H.; Van Nostrand Reinhold, New York; 1981
5. Pressure Vessel and Piping Design, Collected Papers - "Stresses in Large Horizontal Cylindrical Pressure Vessels on Two Saddle Supports 1927-1959"; Zick, L. P.; American Society of Mechanical Engineers; New York; 1960
6. Mechanical Design of Process Systems; Escoe, Keith A.; Gulf Publications, Houston; 1995
7. AISC Manual of Steel Construction; AISC Manual Committee; 9th edition; New York, 1989
8. Engineering Data Book; Gas Processors Suppliers Association; 11th Edition – electronic version; 1998
9. API RP 521 - Guide for Pressure Relieving and Depressurizing Systems; American Petroleum Institute; Washington; 1990
10. API 650 – Welded Steel Tanks for Oil Storage; American Petroleum Institute; Washington; 1998
11. Standards of Tubular Exchanger Manufacturers Association; Tubular Exchanger Manufacturers Association; New York; 1998
12. ASME Boiler and Pressure Vessel Code Section II, Materials, American Society of Mechanical Engineers; New York; 1998
13. Milestones in Pressure Vessel Technology; Spence J., Nash D. H.; International Journal of Pressure Vessels and Piping; volume 81, 2004; pg 89-118

14. Developments in Post-construction Codes and Standards in the United States; Becht IV C., Sims J. R., Neely C. C.; International Journal of Pressure Vessels and Piping; volume 81, 2004; pg 569-574
15. Design by Analysis versus Design by Formula of High Strength Steel Pressure Vessels: a Comparative Study; Diamantoudis A. T., Kermanidis T.; International Journal of Pressure Vessels and Piping; volume 82, 2005; pg 43-50
16. Computer Aided Design of Pressure Vessels; Bilir, Ömer G., Özgen, Kürşat M.; International Journal of Pressure Vessels and Piping; volume 40, 1989; pg 161-172
17. Knowlegde Based Systems for Pressure Vessel Design; Lawson, John; International Journal of Pressure Vessels and Piping; volume 53, 1993; pg 23-38
18. A Computer Program for Cylindrical Shell Analysis; Seng, Ong Lin; International Journal of Pressure Vessels and Piping; volume 30, 1987; pg 131-149
19. CAPD – Computer-aided Plant Design; Burdorf A., Kampczyk B., Lederhose M., Schmidt-Traub H.; Computers and Chemical Engineering; volume 28, 2004; pg 73-81
20. Computer Aided Design of Pressure Vessels by using ASME-VIII; İşçi, Hakan; M.Sc. Thesis, METU; 1999
21. Pressure Vessels: the ASME Code Simplified; Chuse, Robert; McGraw-Hill, New York; 1977
22. API 579: A comprehensive fitness-for-service guide; Anderson Ted L., Osage David A.; International Journal of Pressure Vessels and Piping; volume 77, 2000; pg 953-963

APPENDIX A:
JOINT EFFICIENCIES AND RADIOGRAPHIC INSPECTION

The below figure represents the cases according to longitudinal and circumferential types of welds for cylindrical shells, which shall be later used in joint efficiency tables and matrices.

Table A.1 – Weld cases

Case	Longitudinal Radiography	Circumferential Radiography
F1	Full – UW11(a) / Type 1	Full – UW11(a) / Type 1
F2	Full – UW11(a) / Type 2	Full – UW11(a) / Type 2
S1	Spot – UW11(b) / Type 1	Spot – UW11(b) / Type 1
S2	Spot – UW11(b) / Type 2	Spot – UW11(b) / Type 2
S3	N/A	Spot – UW11(a)(5)b / Type 1
S4	N/A	Spot – UW11(a)(5)b / Type 2
N1	None – UW11(c) / Type 1	None – UW11(c) / Type 1
N2	None – UW11(c) / Type 2	None – UW11(c) / Type 2
N3	N/A	None – UW11(c) / Type 3
N4	None – UW11(c) / Type 4	None – UW11(c) / Type 4
N5	N/A	None – UW11(c) / Type 5
N6	N/A	None – UW11(c) / Type 6
SMLS	Seamless	N/A

It must be noted that the longitudinal radiography does not affect circumferential joint efficiency, however, vice versa is not true, i.e. longitudinal joint efficiency for some cases depend on circumferential radiography. For the circumferential cases below, the circumferential joint efficiencies are defined as follows:

Table A.2 - Circumferential Joint Efficiency Table

Circumferential Radiography	F1	F2	S1	S2	S3	S4	N1	N2	N3	N4	N5	N6
Circumferential Joint Efficiency	1	0.9	0.85	0.8	0.85	0.8	0.7	0.65	0.6	0.55	0.5	0.45

To see the dependency of longitudinal joint efficiency on circumferential radiography, below is defined a longitudinal joint efficiency matrix that is very practical. On the leftmost column lies the longitudinal radiography cases, where on the uppermost row lies the ones for circumferential radiography. When investigated, it is seen that circumferential radiography influences longitudinal joint efficiency for the long. radiography cases of F1, F2, and SMLS.

Table A.3 - Longitudinal Joint Efficiency Matrix

Circ. Long	F1	F2	S1	S2	S3	S4	N1	N2	N3	N4	N5	N6
F1	1	1	0.85	0.85	1	1	0.85	0.85	0.85	0.85	0.85	0.85
F2	0.9	0.9	0.8	0.8	0.9	0.9	0.9	0.9	0.9	0.9	0.9	0.9
SMLS	1	1	0.85	0.85	1	1	0.85	0.85	0.85	0.85	0.85	0.85
S1	0.85											
S2	0.8											
N1	0.7											
N2	0.65											
N4	0.6											

APPENDIX B:
SAMPLE WIND AND SEISMIC MAPS

B.1: SAMPLE BASIC WIND SPEED MAP OF U.S.A.

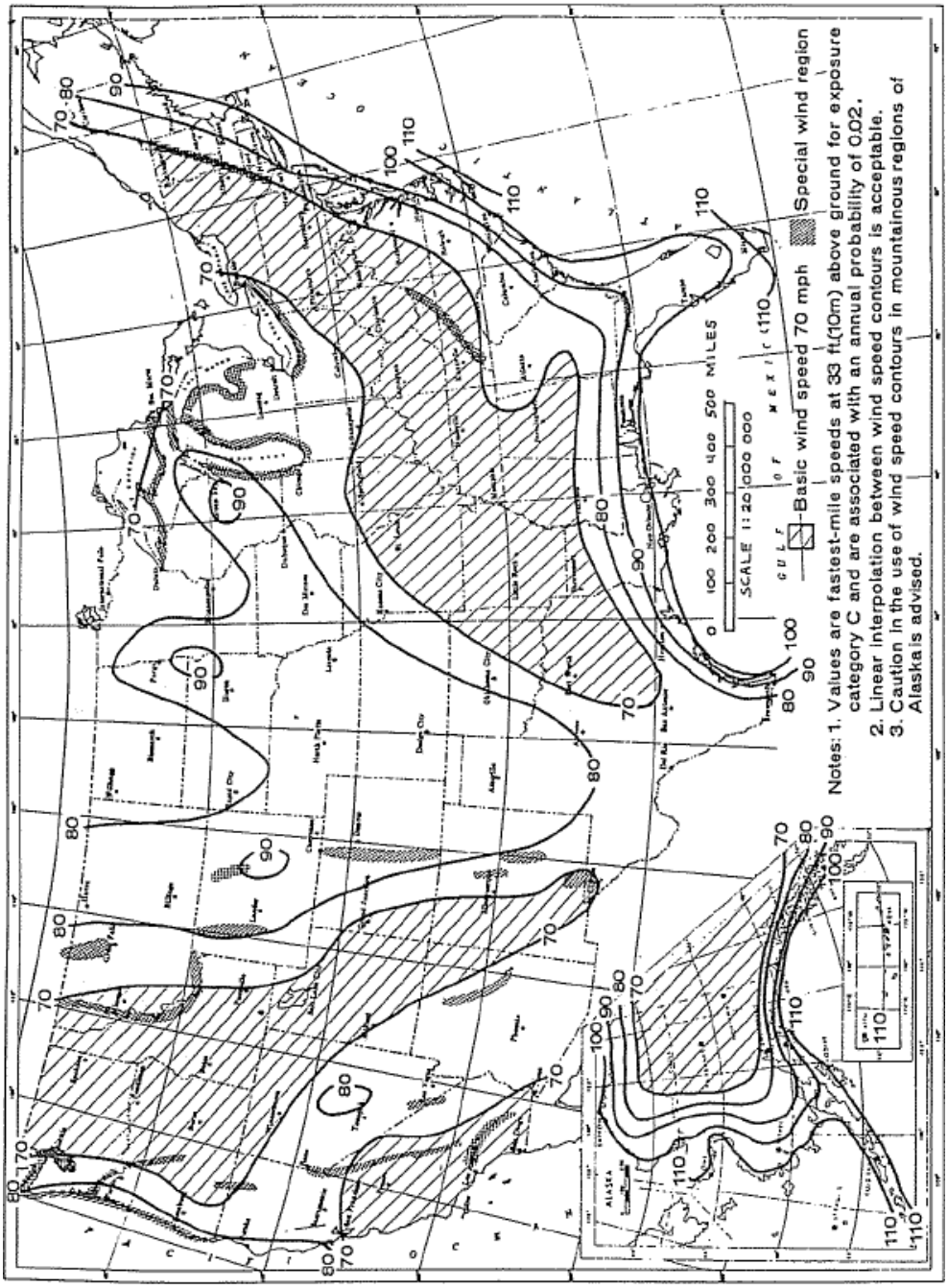

Fig. B.1 – Sample basic wind speed of the U.S.A. [6]

B.2: SAMPLE SEISMIC ZONE MAP OF U.S.A.

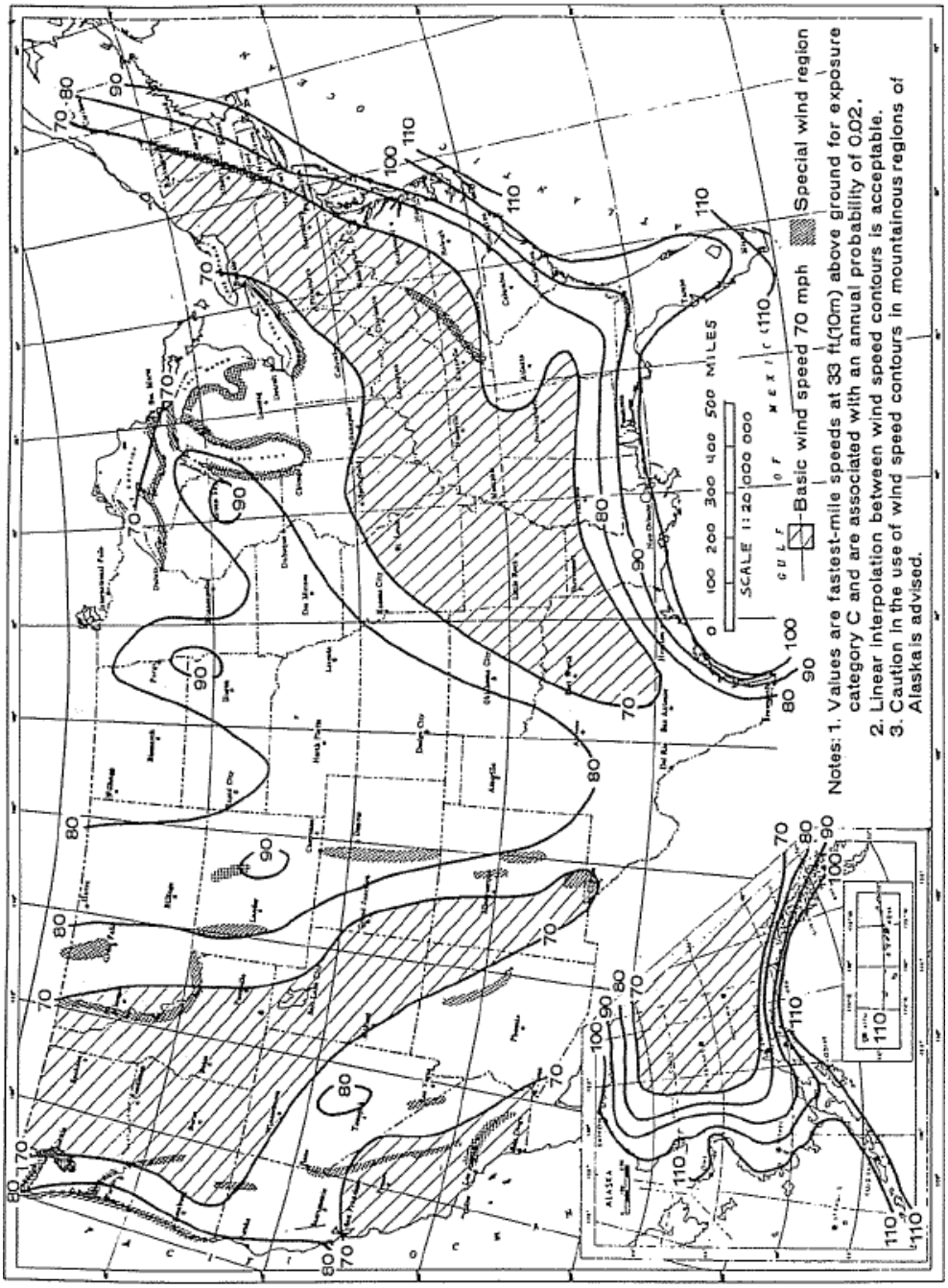

Fig..B.2 - Sample seismic zone map of the U.S.A. [6]

APPENDIX C:
ERROR CODES IN VESSELAID

System	Part / Component	Error Code	Related Equation	Remarks
PV	combined loading	1	4.20	
PV	combined loading	2	4.21	
PV	combined loading	3	4.22	
PV	combined loading	4	4.23	
PV	combined loading	5	4.24	
PV	combined loading	6	4.25	
PV	combined loading	7	4.26	
PV	combined loading	8	4.27	
PV	combined loading	9	4.28	
PV	shell	11	3.40	
PV	shell	12	3.50	
PV	shell	13	3.40	at test conditions
PV	shell	14	3.50	at test conditions
PV	head	21	3.8, 3.9	
PV	head	22	3.8, 3.9	

System	Part / Component	Error Code	Related Equation	Remarks
PV	head	23	3.8, 3.9	at test conditions
PV	head	24	3.8, 3.9	at test conditions
PV	head	31	3.10	
PV	head	32	3.10	
Skirt	skirt shell	101	5.1	
Skirt	skirt shell	102	5.2	
Skirt	skirt shell	103	5.3	
Skirt	skirt shell	104	5.4	
Skirt	skirt base	111	5.6, 5.7	
Skirt	skirt base	112	5.8	
Skirt	top stiff. ring	121	5.11	
Skirt	vertical stiffeners	122	5.12	
Legs	leg	201	5.30	
Legs	leg	202	5.35	
Legs	leg	203	5.34	
Lugs	lug	301	5.40	
Lugs	lug	302	5.41	
Lugs	lug	303	5.45	
Lugs	lug	304	5.49	
Lugs	lug	305	5.52	
Saddles	saddle-shell	401	5.55	
Saddles	saddle-shell	402	5.53	
Saddles	saddle-shell	403	5.56	
Saddles	saddle-shell	404	5.57	
Saddles	saddle-shell	405	5.58	
Saddles	saddle-shell	406	5.59	

System	Part / Component	Error Code	Related Equation	Remarks
Saddles	saddle-shell	407	5.59	
Saddles	saddle-shell	408	5.60	
Saddles	saddle-shell	409	5.61	
Saddles	saddle-shell	410	5.62	
Saddles	saddle plate	421	5.63	
Saddles	saddle plate	422	5.64	
Saddles	bearing plate	431	5.70	
Saddles	bearing plate	432	5.69	
Saddles	stiffening ring	441	5.66, 5.67	
Saddles	stiffening ring	442	5.66, 5.67	
Heat Exc.	TEMA	1011	7.3	
Heat Exc.	TEMA	1012	7.4	
Heat Exc.	ASME	1013	7.5	
API 650 Tanks	roof	1111	8.1, 8.5	per selected roof type
API 650 Tanks	roof	1112	8.4, 8.8	per selected roof type
API 650 Tanks	roof	1113	8.10, 8.12	per selected roof type
API 650 Tanks	roof	1114	8.9	
API 650 Tanks	shell	1121	8.13 - 8.20	per selected method
API 650 Tanks	annular plate	1131	8.28	

APPENDIX D:
USER'S MANUAL

To begin using VESSELAID, simply run "vesselaid.exe" file found in the enclosed disk. The main menu that comes on the screen is as below.

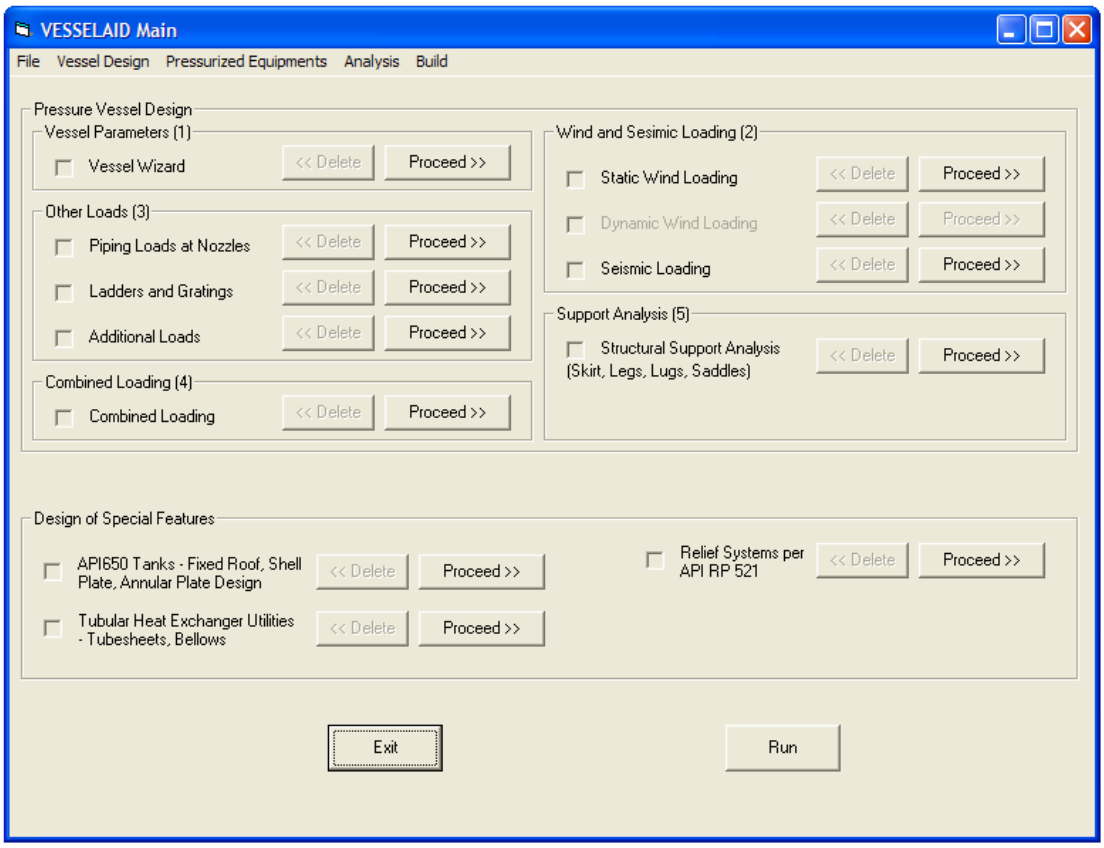

Fig. D.1 – Main menu

The main menu consists of two sub-menus as seen, vessel design and design of special features. As stated, it is possible to choose one of the options above independently and begin working with any one of the features. In this example however, the vessel design is performed respectively, starting from constructing the vessel, specifying loads on it, performing the support design; after which design of special features follow.

After desired data is entered, report can be generated by “Run” command.

D.1 – VESSEL WIZARD

Clicking on “Proceed” as above in the *Vessel Wizard* frame, following screen appears:

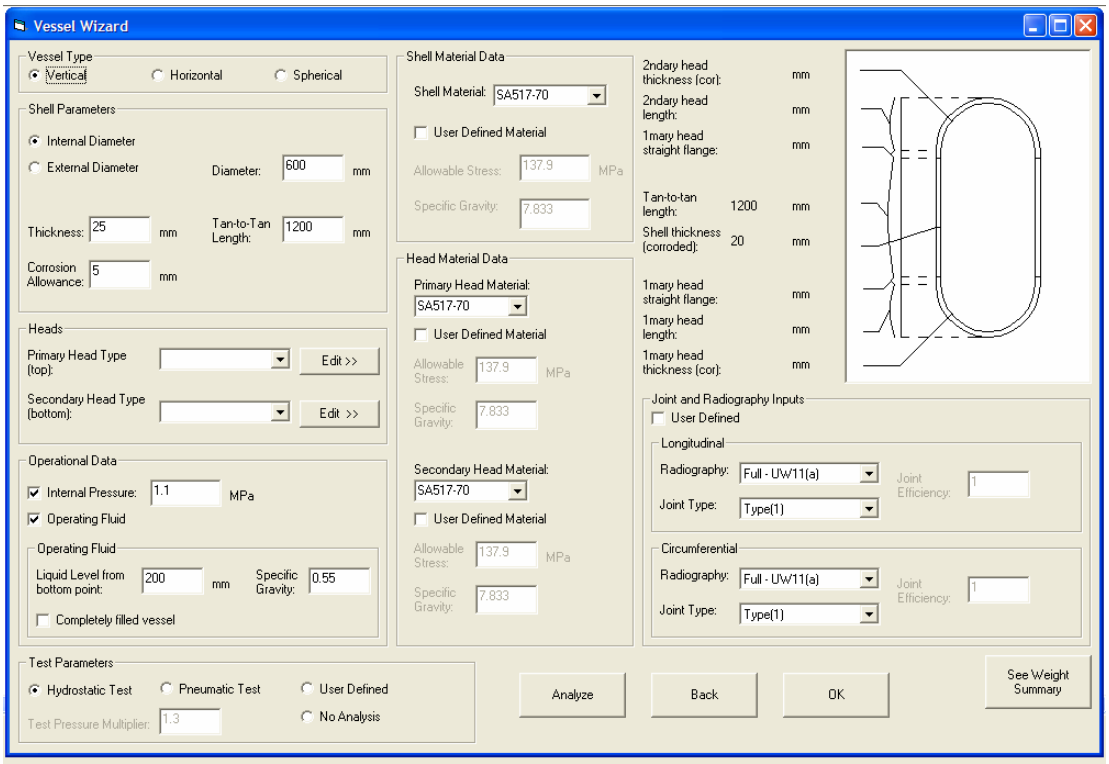

Fig. D.2 – Vessel wizard screen

Vessel type (vertical, horizontal, wholly spherical), dimensions, primary and secondary head parameters (namely bottom and top heads for vertical vessels, left and right heads for horizontal vessels), operational and test data, joint and radiography inputs, materials can be entered in this screen.

It is always possible for the user to enter only the required material data for the relative analysis, but VESSELAID also includes material database including the most common materials in normal conditions. User can modify the values as desired. Below is seen

how a material is chosen as shell material, and how user defined values can be entered to the required places. In *Vessel Wizard*, shell, primary head, and secondary head materials can be specified.

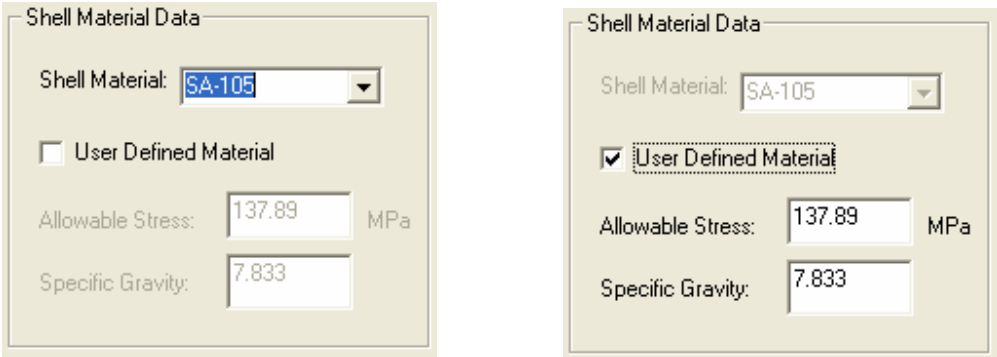

Fig. D.3 – Material selection screen

The main test parameter is the *test pressure multiplier* which is the factor that design pressure is multiplied with to evaluate the test pressure. In case hydrostatic test is selected, the vessel is assumed to be completely filled with water, whereas in case of a pneumatic test, air fills the vessel completely. If a user defined pressure multiplier is selected, no fluid content during the test is assumed.

In case a spherical vessel is to be designed, certain parameters are adjusted by themselves, and the heads are automatically selected as *hemispherical*. As seen from Fig. D.5, in case other vessel types are selected, elliptical or flanged and dished heads can also be selected.

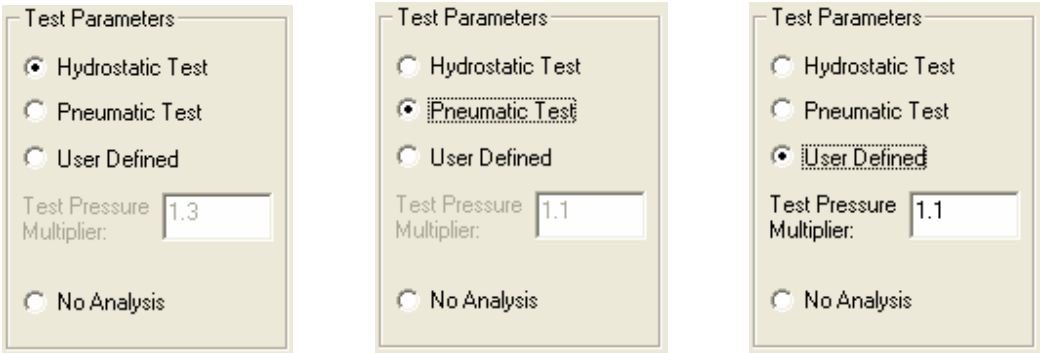

Fig. D.4 – Test parameters

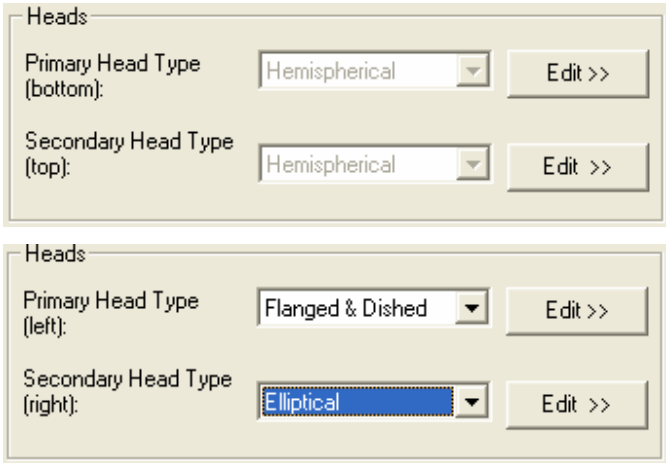

Fig. D.5 – Head type selection examples, (at top for spherical vessels, at bottom for horizontal / vertical vessels)

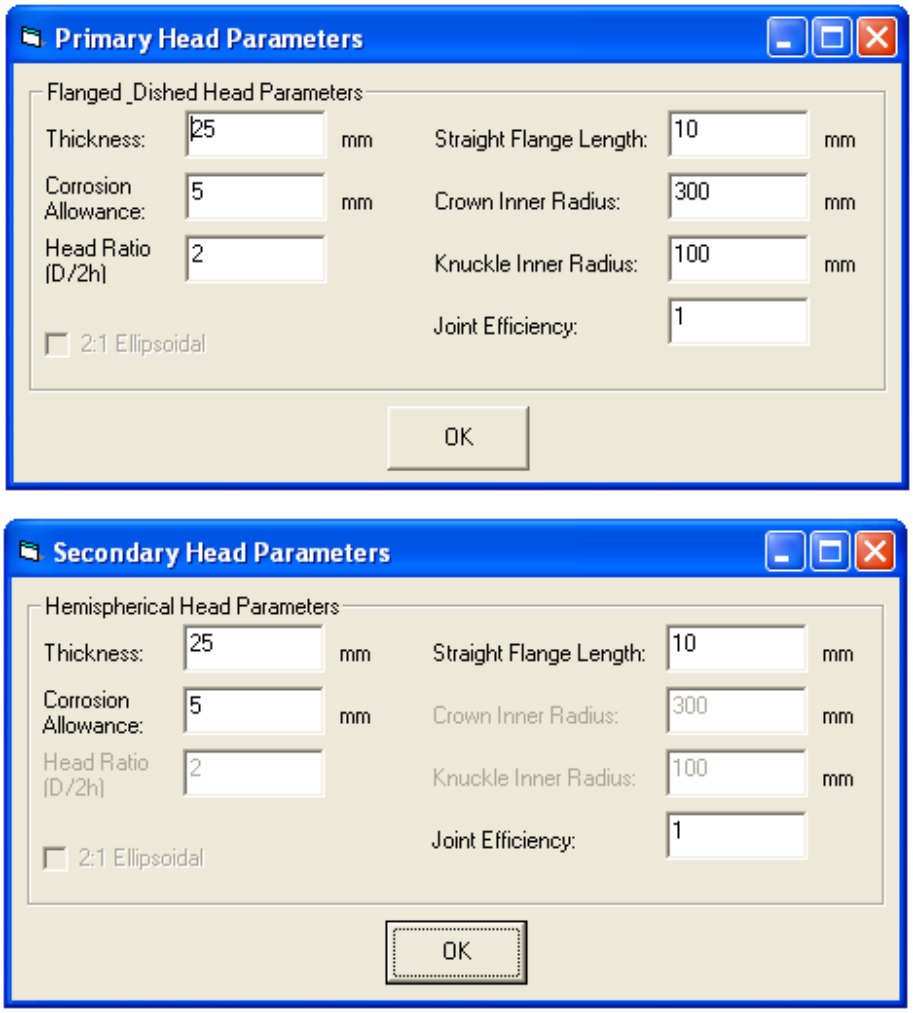

Fig. D.6 – Examples of head parameter screens

Clicking on "Edit" in the *heads* frame in *Vessel Wizard*, head parameter screens come up as in Fig. D.6 above.

Operating fluid and internal pressure can be entered from the *operational fluid* frame. According to the vessel geometry, *completely filled* option automatically fills the vessel with the fluid of which specific gravity can be entered as below in Fig. D.7.

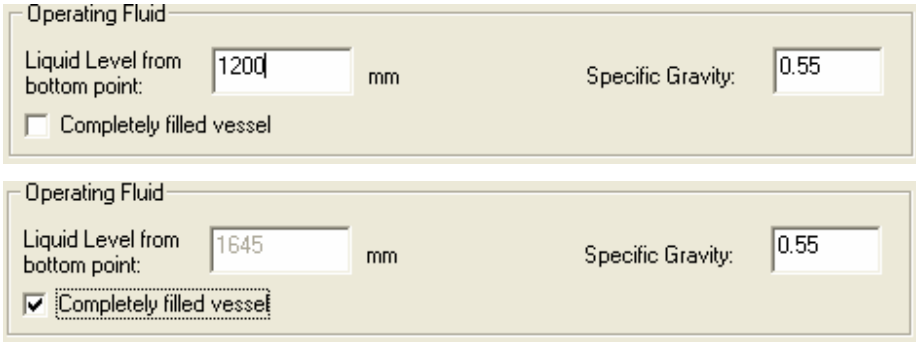

Fig. D.7 – Operational fluid parameters

Shell joint and radiography inputs are entered as can be seen in Fig. D.8. Once the radiographic inspection type and joint types are entered, VESSELAID evaluates longitudinal and circumferential joint efficiencies with respect to Appendix A. User can also manually enter these joint efficiency data.

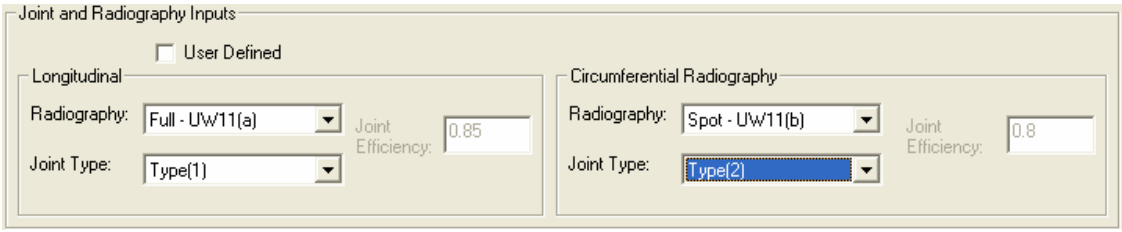

Fig. D.8 – Joint and radiography inputs

Weight summary can be seen by clicking the "See Weight Summary" command, which yields a screen similar to below.

If desired, a quick analysis may be performed to see the compatibility of the vessel with the design requirements. Clicking "Analyze", the *Vessel Wizard Analysis* screen appears (Fig. D.10), summarizing basic design and analysis parameters and stating the errors found in Appendix C if any found.

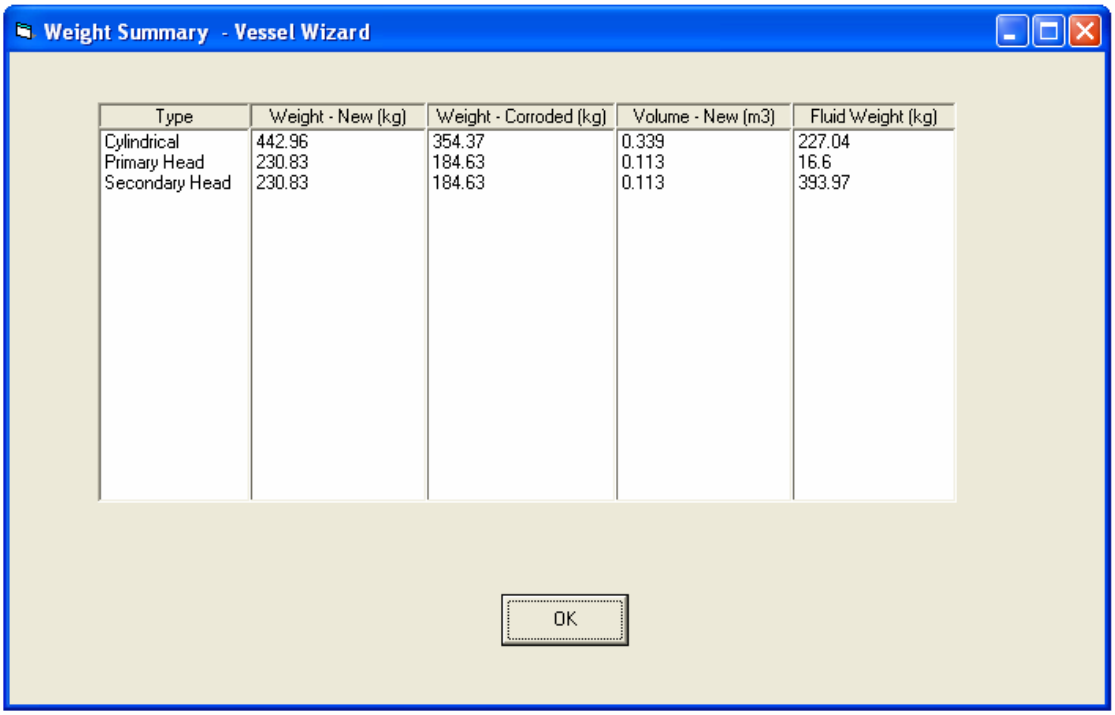

Type	Weight - New (kg)	Weight - Corroded (kg)	Volume - New (m3)	Fluid Weight (kg)
Cylindrical	442.96	354.37	0.339	227.04
Primary Head	230.83	184.63	0.113	16.6
Secondary Head	230.83	184.63	0.113	393.97

Fig. D.9 – Weight summary

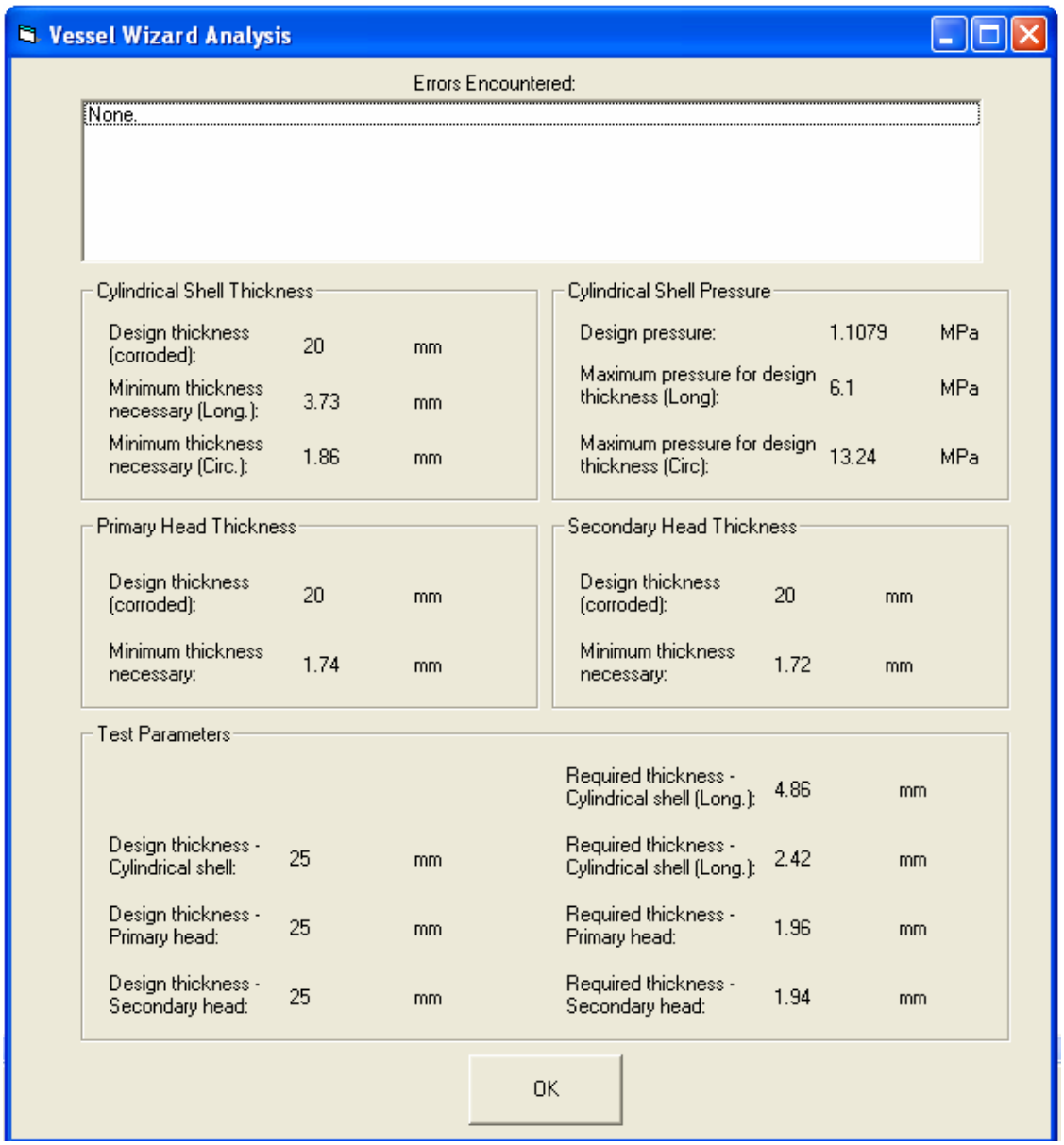

Fig. D.10 – Vessel wizard analysis screen

D.2 – WIND AND SEISMIC LOADING

In VESSELAID, static parameters must be entered first in order to perform dynamic analysis. Proceeding with the *static wind loading* from the *main menu*, the screen in below figure appears, containing static wind parameters. It must be noted that vessel

data previously entered in *vessel wizard* is transferred here, but these can be adjusted by simply clicking "Adjust Parameters" command.

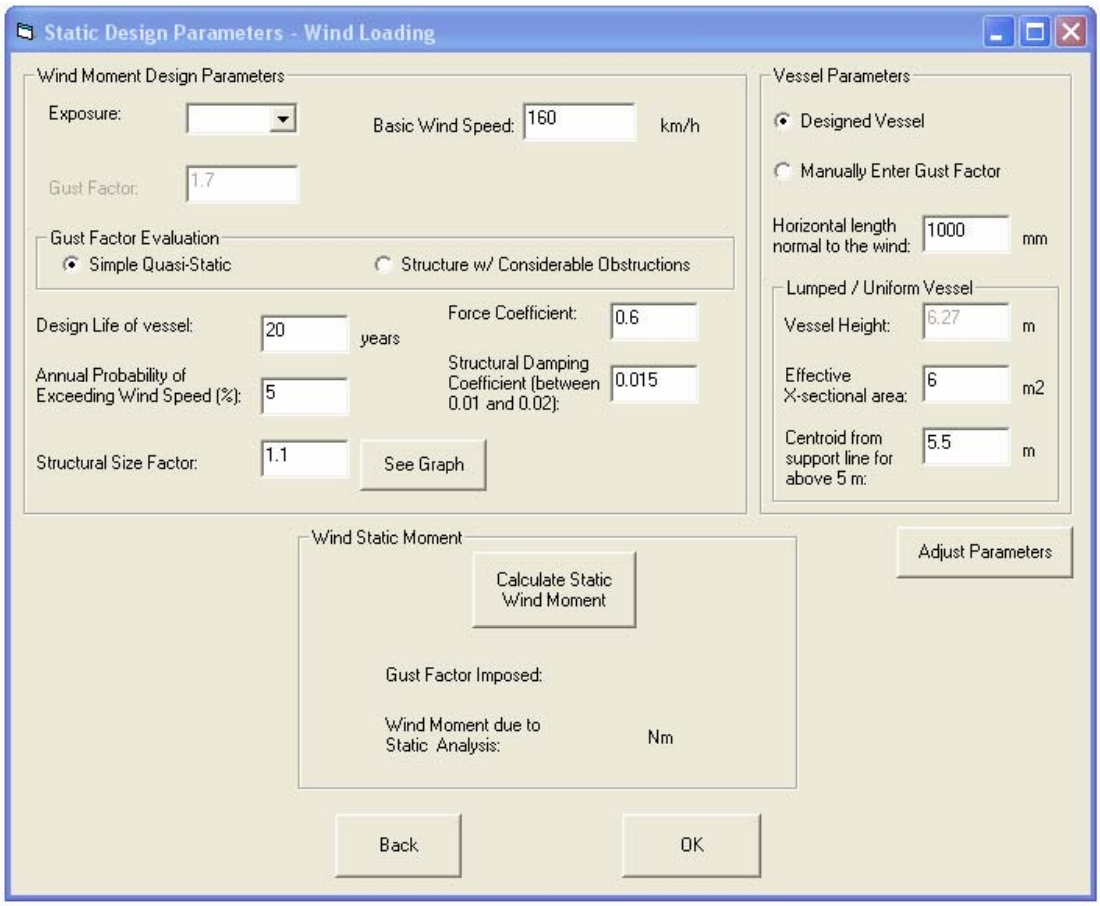

Fig. D.11 – Static wind loading screen

The user is also free to impose a pre-defined gust factor, or simply enter vessel parameters and calculate the gust factor to be imposed on the vessel naturally. Effective cross sectional area and horizontal length normal to wind must be entered by considering factors like insulation and attachments. These parameters are not crucially important for the sake of conservative analysis, and hence can be approximated roughly.

Vessel's environment also is an important parameter, if considerable obstructions are present, parameters are adjusted such that the analysis consists a turbulent and transient

flow rather than simple quasi-static flow. Calculating the moment and naturally-imposed Gust factor can be performed to view the results quickly.

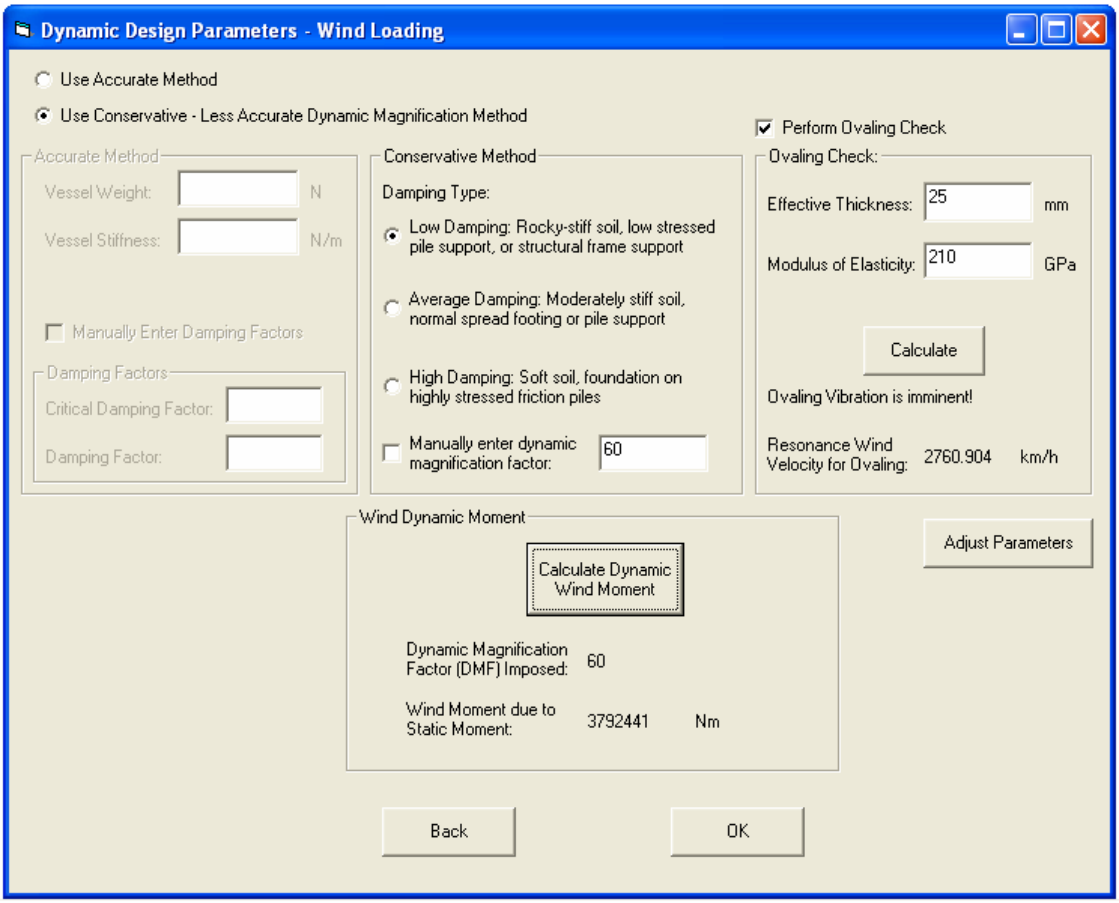

Fig. D.12 – Dynamic wind loading screen

For dynamic wind loading, as stated in Section 4.2, two methods are available, the accurate method being rather complex. Conservative method is generally used practically. Ovaling check is also can quickly be viewed.

If dynamic loading is not entered, VESSELAID considers static moment as wind load throughout the analysis.

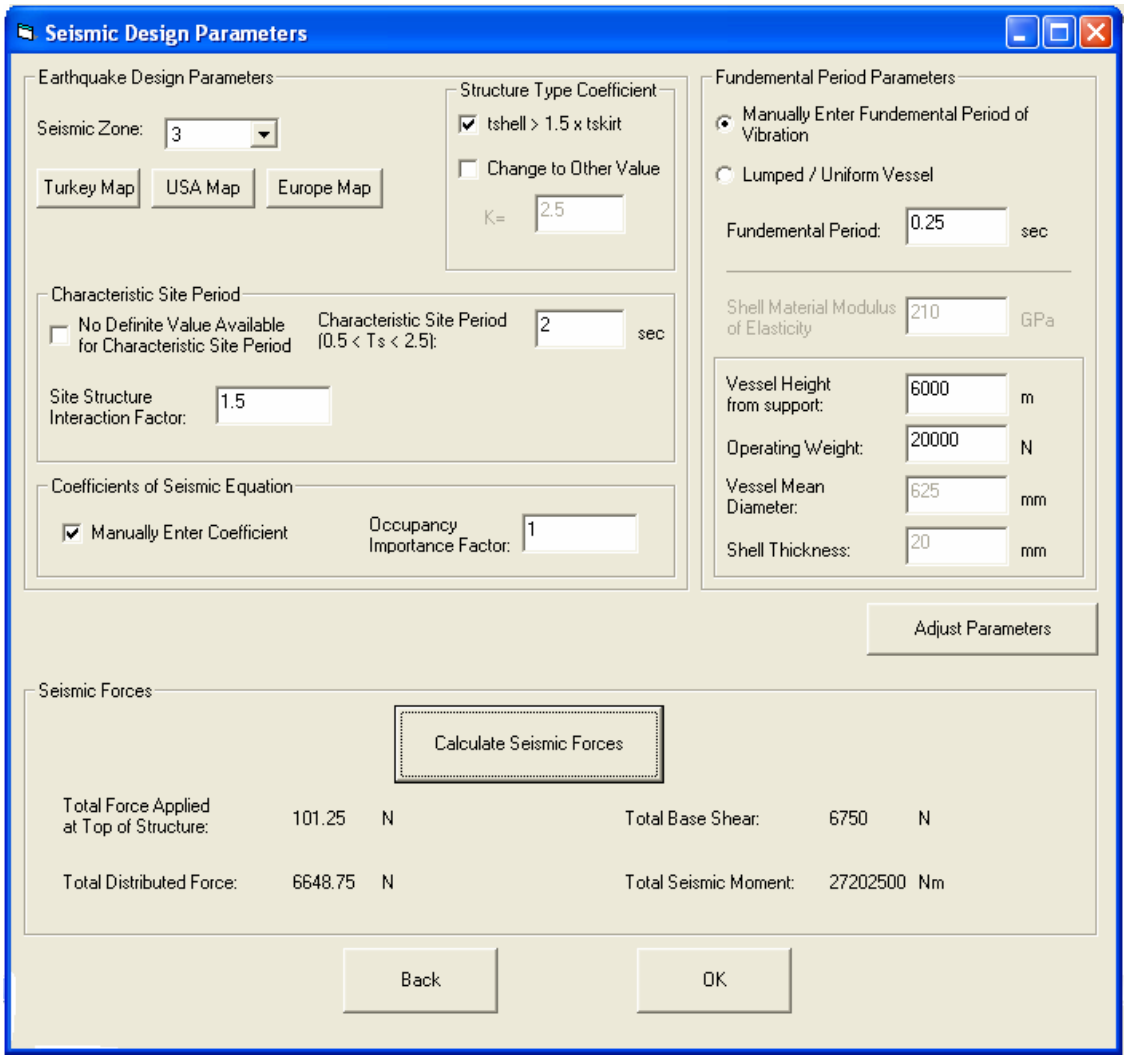

Fig. D.13 – Seismic loading screen

Similar to wind loading parameters, previously defined parameters can be adjusted utilizing "Adjust Parameters" command. If UBC is thoroughly studied, all parameters can be adjusted manually. Otherwise, values recommended by UBC in case of no or little information are automatically replaced by VESSELAID. *Fundamental period of vibration* can also be imposed manually, or evaluated for the vessel parameters entered.

D.3 – OTHER LOADS

As stated in Section 4.4, these loads include piping, ladder, and additional other loads. Piping loading menu is seen in Fig. D.14 below. Here, pipes attached to the vessel can be added or removed, and the imposed moment can be simultaneously viewed. In the below example, three pipes of nominal diameters 1”, 4”, and 6” are added.

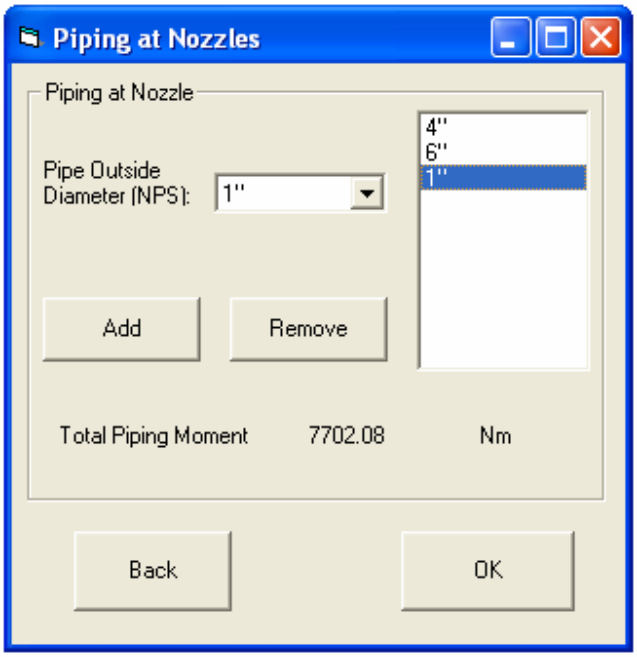

Fig. D.14 – Piping loads screen

Gratings are also added in a similar fashion, as can be seen in the below figure. In the example, a light ladder of 750° revolution and a heavier ladder of 90° revolution are added.

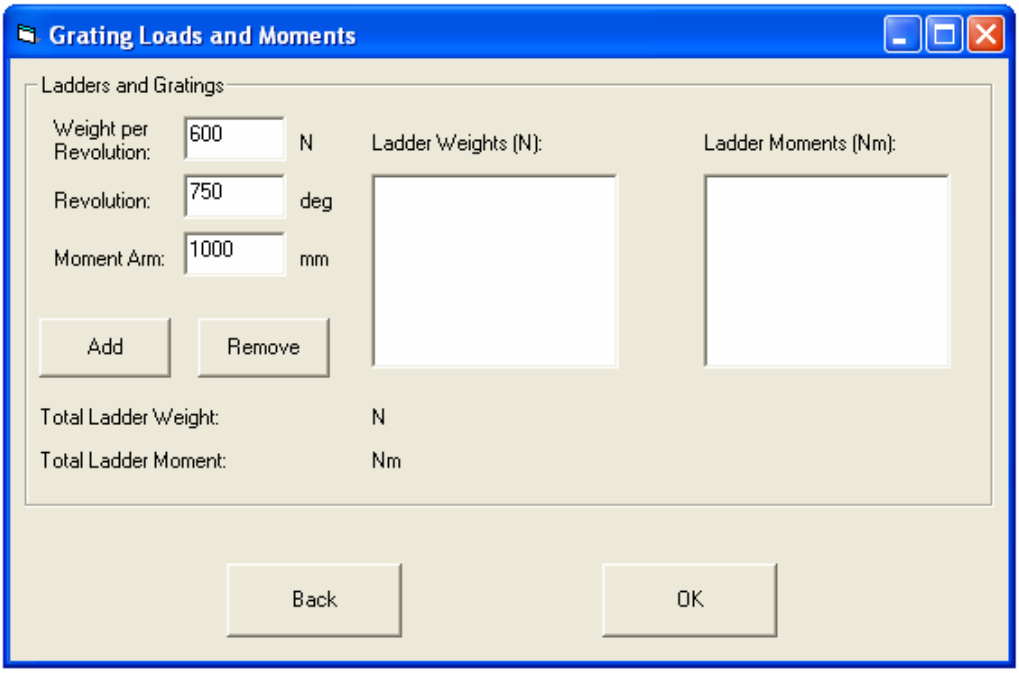

Fig. D.15 – Ladder loading screen

Other additional loads that are not covered under any of the loads can also be added similarly as seen in Fig. D.16.

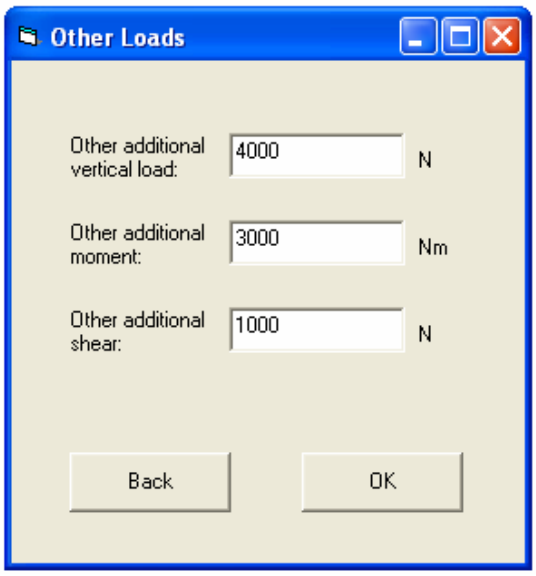

Fig. D.16 – Other loads screen

D.4 – COMBINED LOADS

Before proceeding with the support design, the vessel is to be checked according to the combinations of loadings induced on itself, with *combined loads* screen, as seen below. The parameters from previous data can be restored or adjusted.

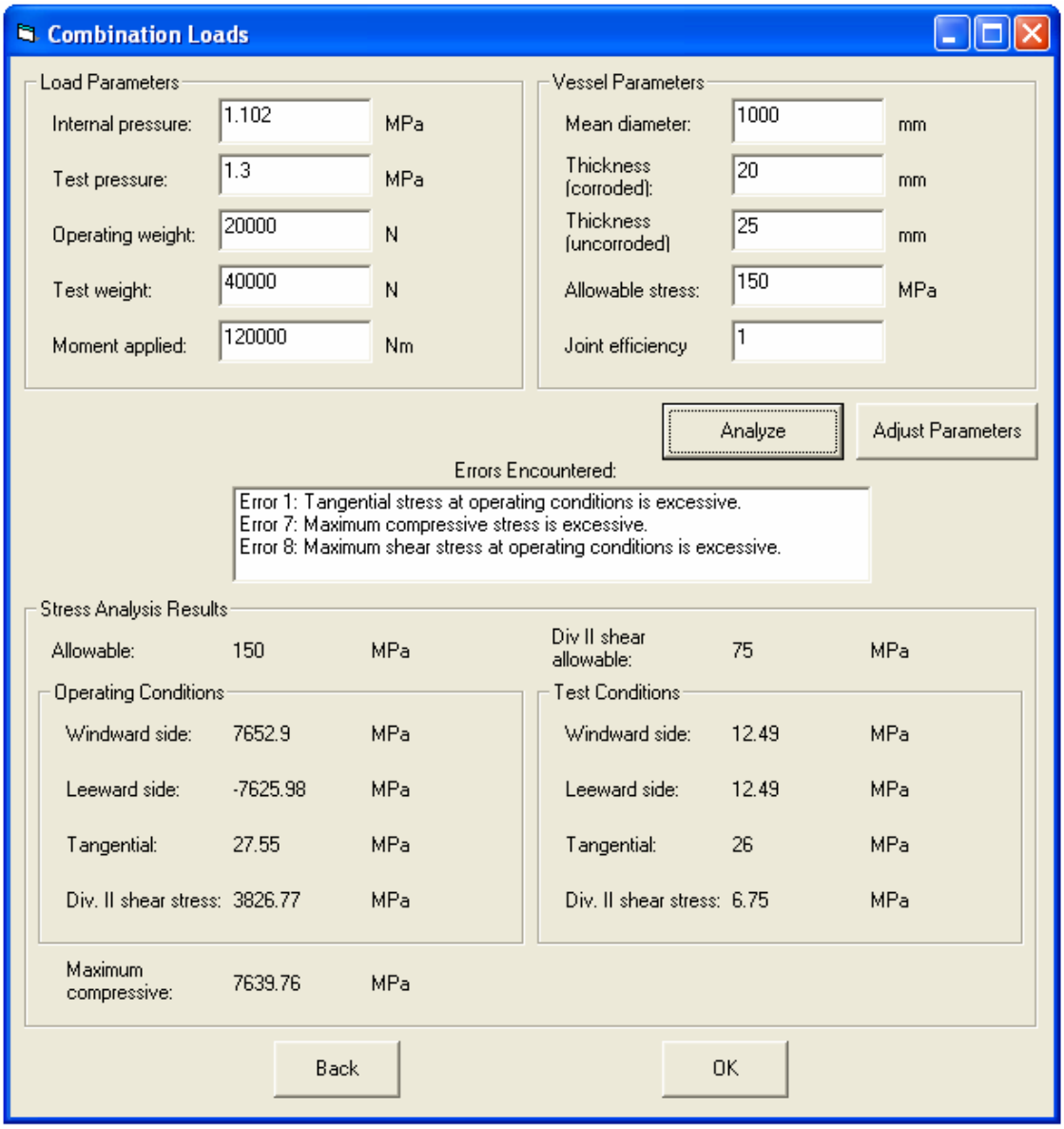

Fig. D.17 – Combined loads screen

D.5 – SUPPORT ANALYSIS

The last section in the vessel design feature of VESSELAID is support analysis, which is highly detailed. As seen from the main screen of support analysis, four types are available. For vertical vessels, skirts, lugs, and legs can be designed; whereas for horizontal vessels, saddles are used. Spherical vessels are supported on legs.

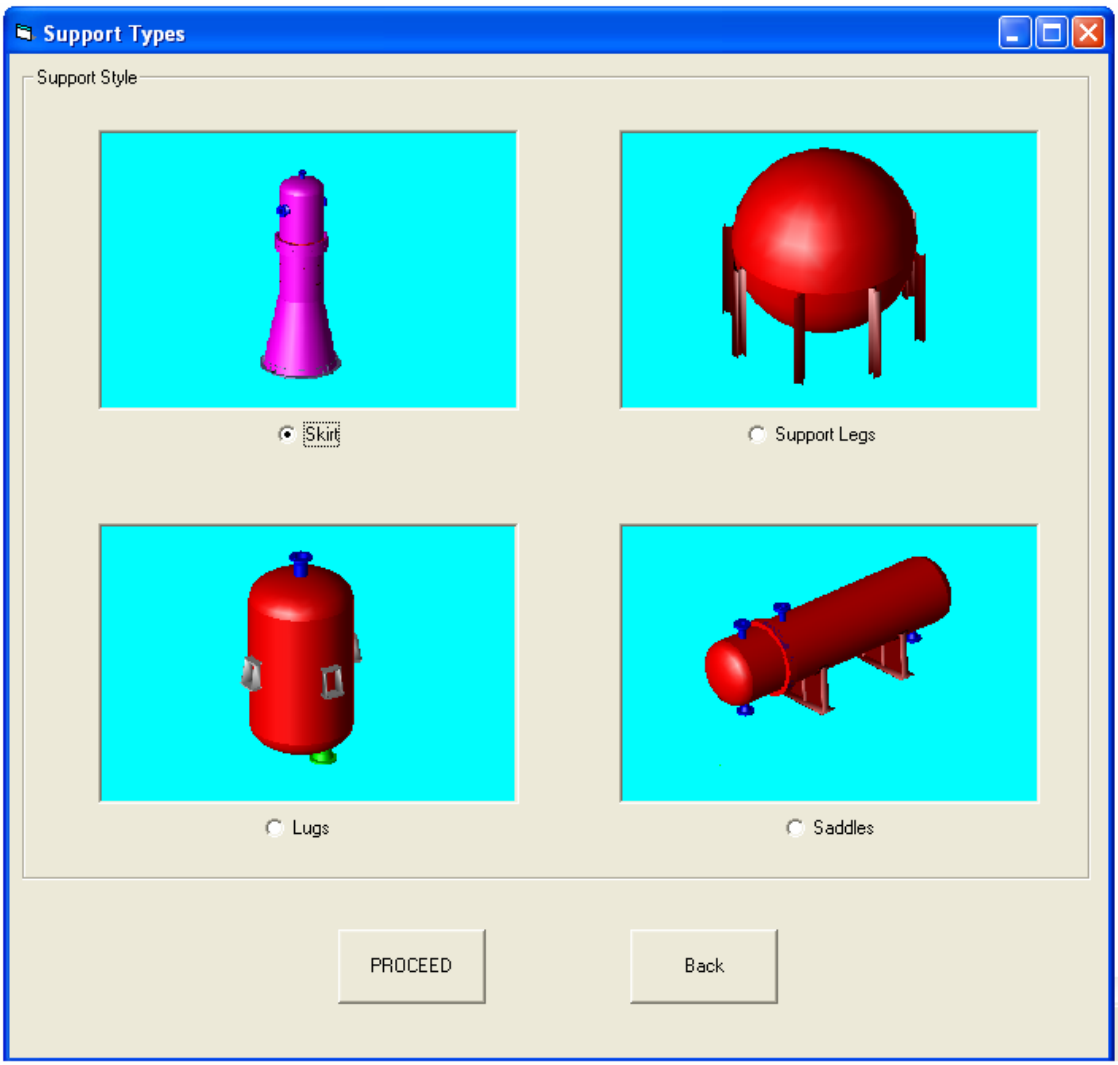

Fig. D.18 – Support analysis main screen

When any of the support type is chosen, an input screen appears for the users utilizing only the support analysis without inputting any other data. The parameters from previous data, if desired, can be adjusted.

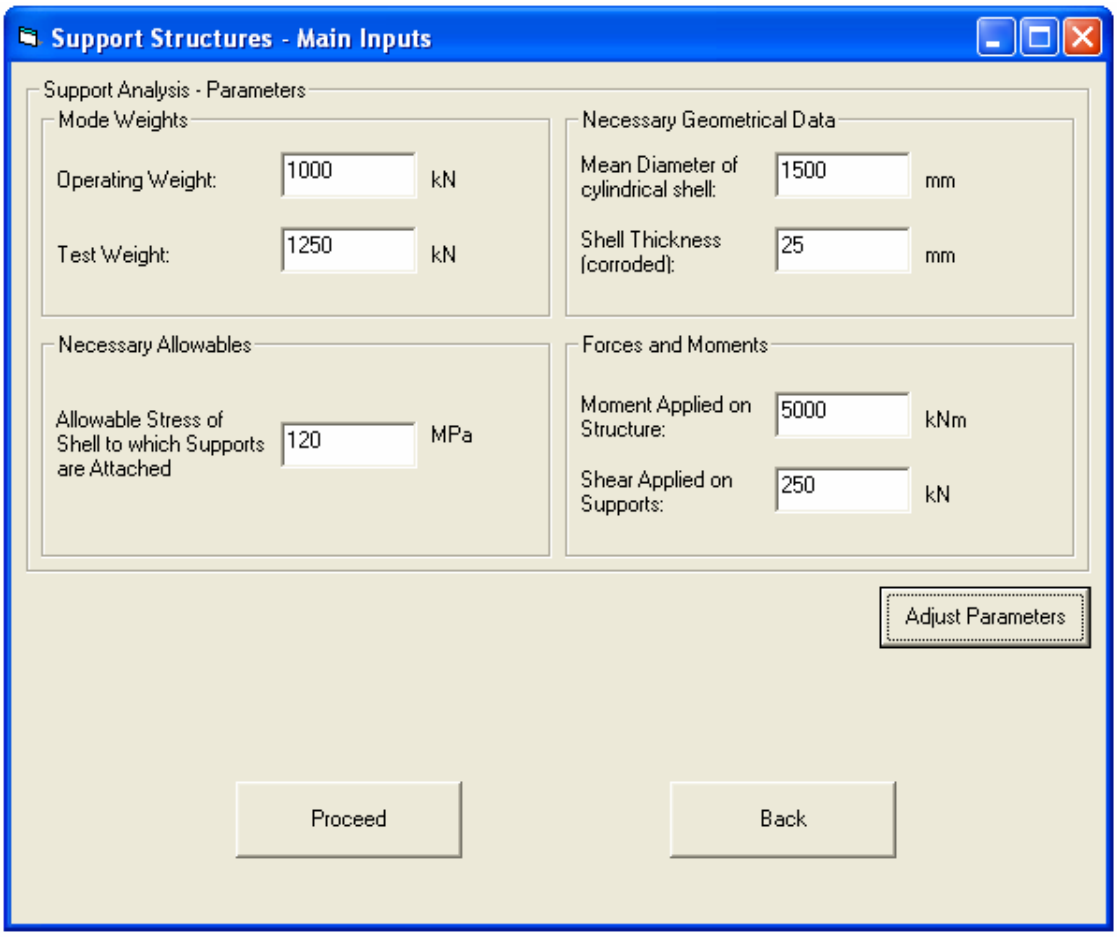

Fig. D.19 – Support analysis, main inputs

D.5.1 – Skirts

Skirts can be straight and flared, also can be of butted type and lapped type. As seen in Fig. D.20, materials can also be chosen same as in *vessel wizard*. The geometrical parameters needed can also be seen in the below figure. Before adding anchor bolts and base plate, the skirt shell can quickly be analyzed as seen in Fig. D.21.

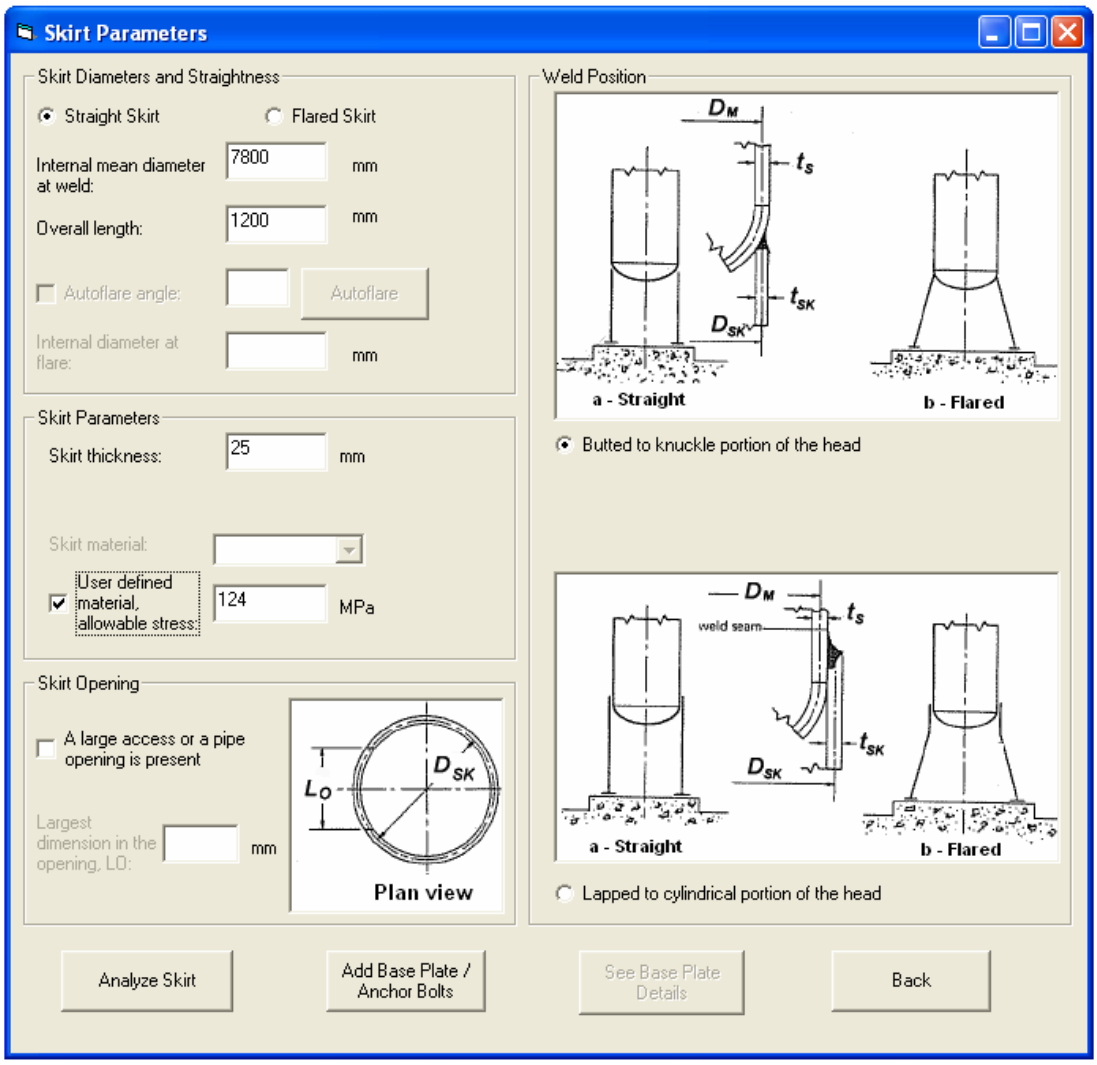

Fig. D.20 – Skirt parameters, main screen

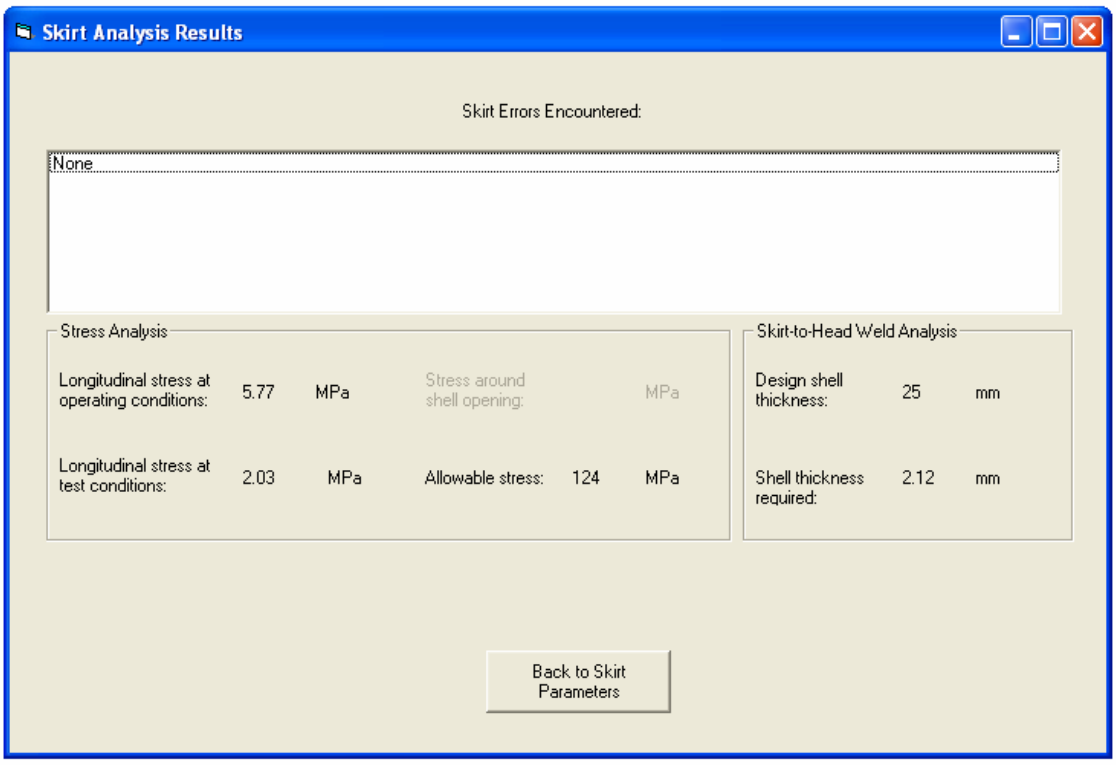

Fig. D.21 – Skirt shell analysis results screen

To add base plate and anchor bolts, type of the base plate must be selected first in order, as type A and type B base plates have various different inputs and analysis methods. This selection, material properties (either user-defined or from database), and main geometrical parameters are entered through the *main skirt base plate* screen that is seen in Fig. D.22 below. It must be noted that bending, tensile, and shear stresses throughout VESSELAID is evaluated according to their dependency on yield strength, as stated by AISC Manual.

Proceeding with the selected type, anchor bolt selection screen appears, giving the user the flexibility to select one of the three methods discussed in Section 5.2.3. Calculating for the minimum required bolt root area, selection from the bolt database is possible, relative root area given also in the bolt menu. Before proceeding with the base plate analysis, user must specify the concrete pedestal properties that is found beneath the base plate, screen of which is seen in Fig. D.24. The coverage ratio of the pedestal is the

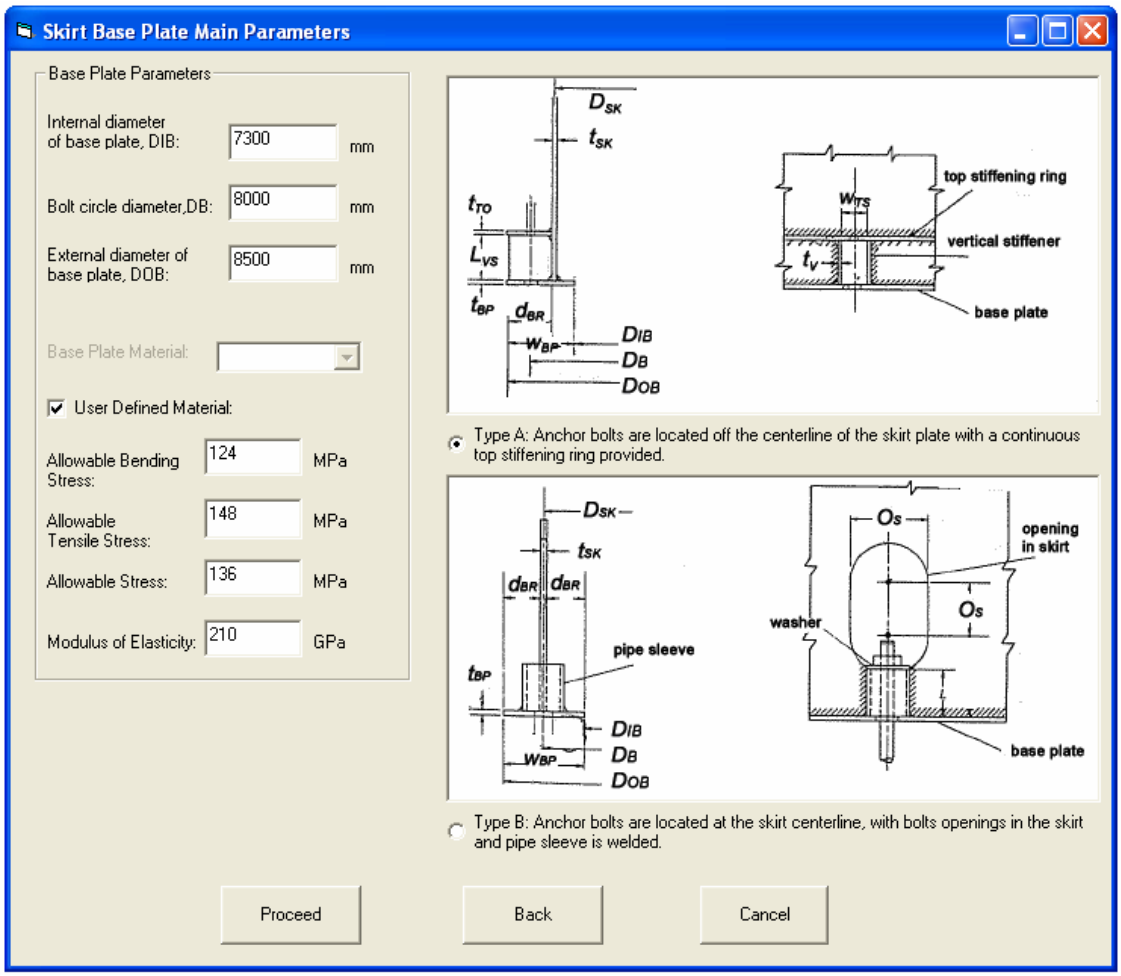

Fig. D.22 – Skirt base plate main screen

primary parameter in distributing the compressive force, together with the compressive strength and elastic modulus of concrete.

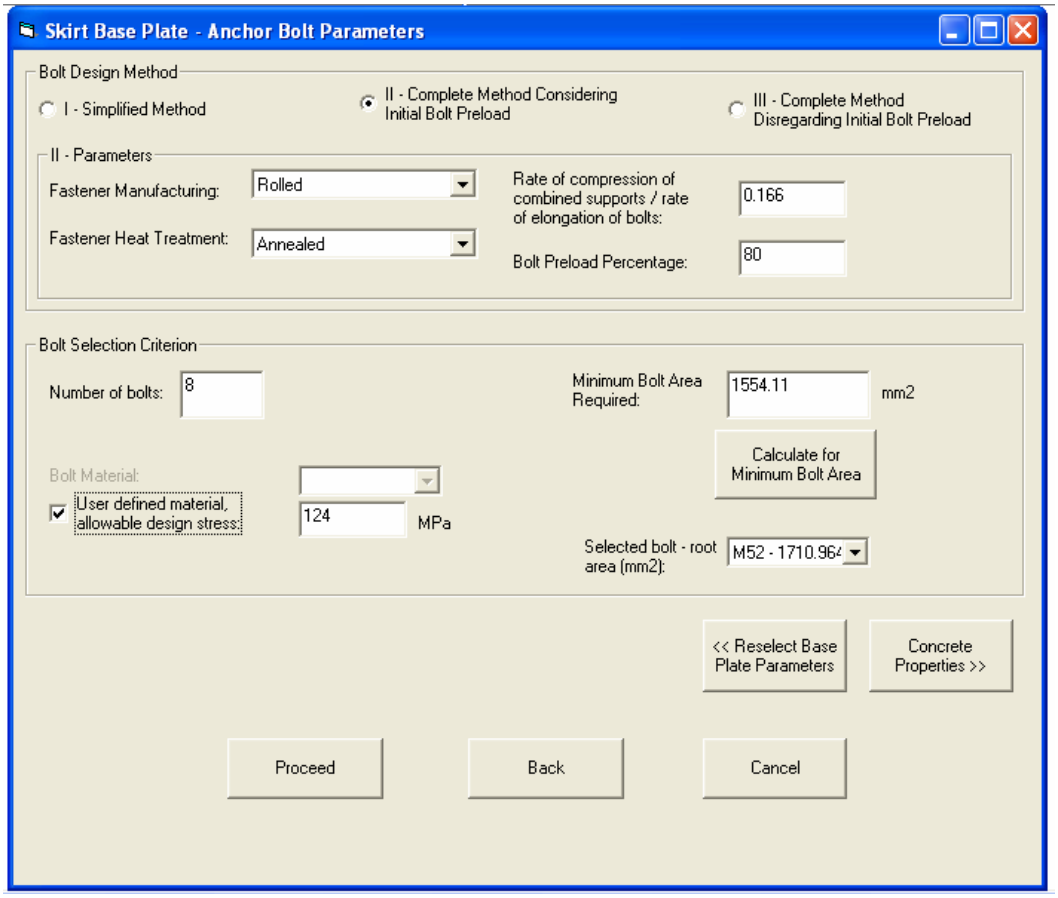

Fig. D.23 – Anchor bolt design and selection screen for skirt base plate

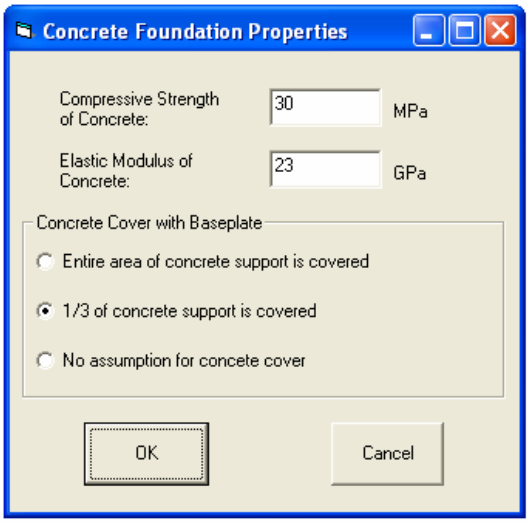

Fig. D.24 – Properties of concrete pedestal found beneath base plate

According to the base plate type and bolts selected, the base plate input screens following bolt selection are given in Fig. D.25 and Fig. D.26. Once the parameters are selected, base plates can also be analyzed as seen in Fig. D.28. However if an error is present, a warning screen appears as seen in Fig. D.27. If the errors are suppressed, they are again notified to the user as seen in Fig. D.28.

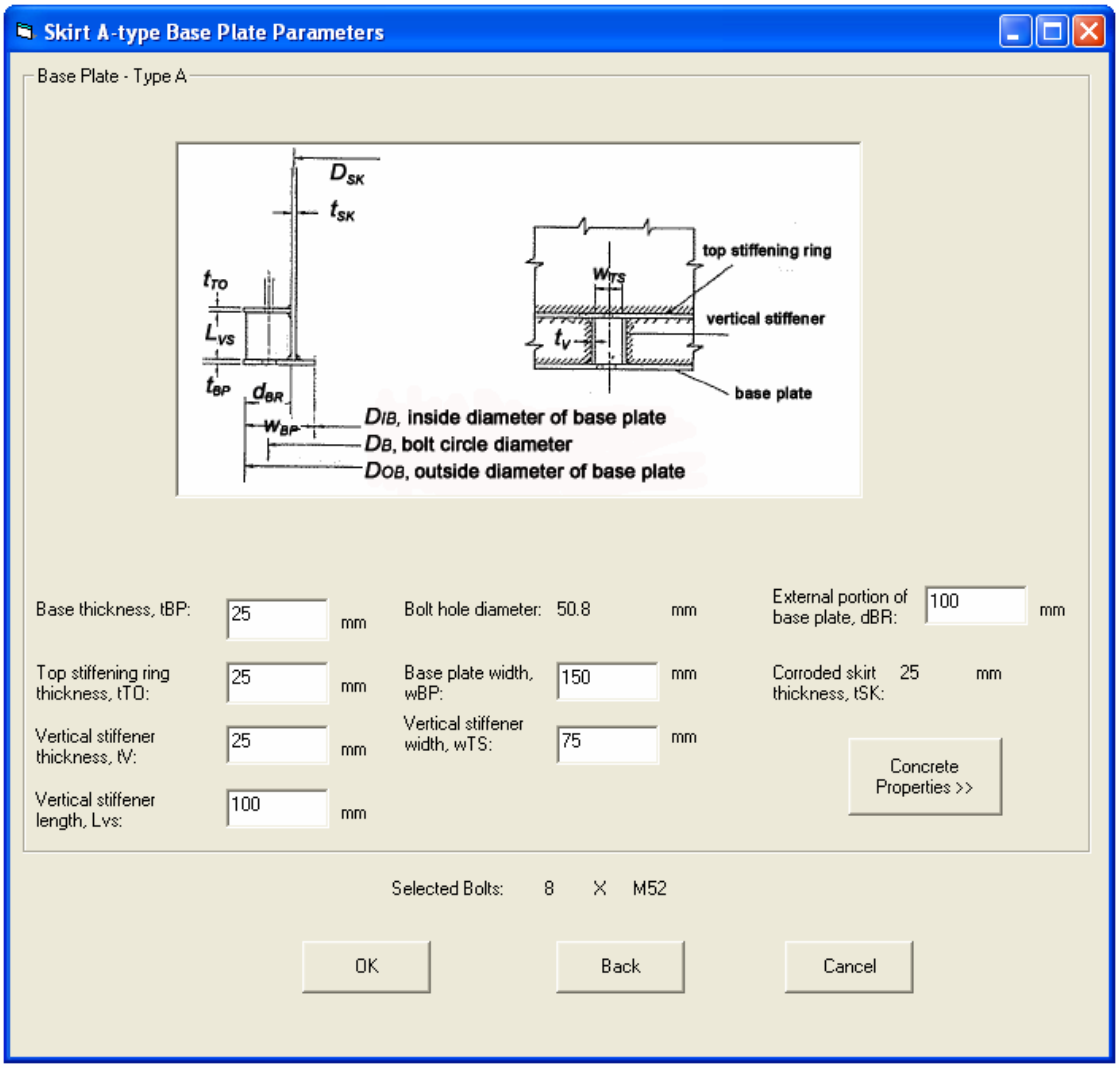

Fig. D.25 – Input screen for base plate of type A

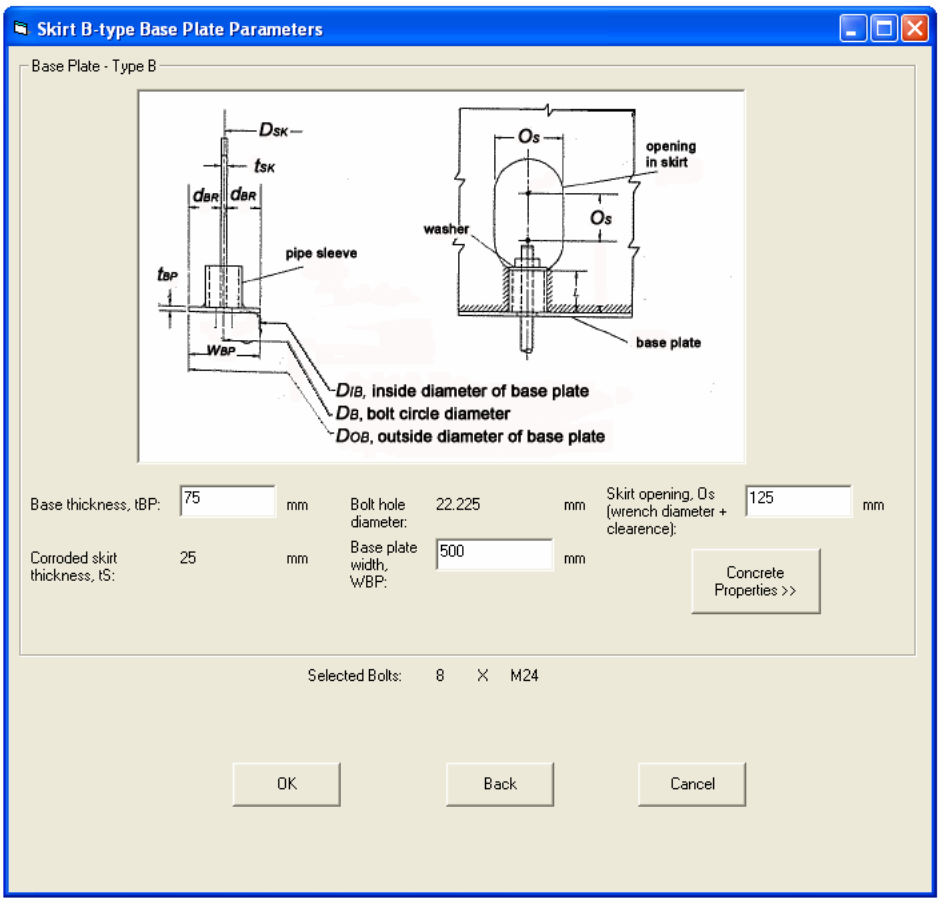

Fig. D.26 – Input screen for base plate of type B

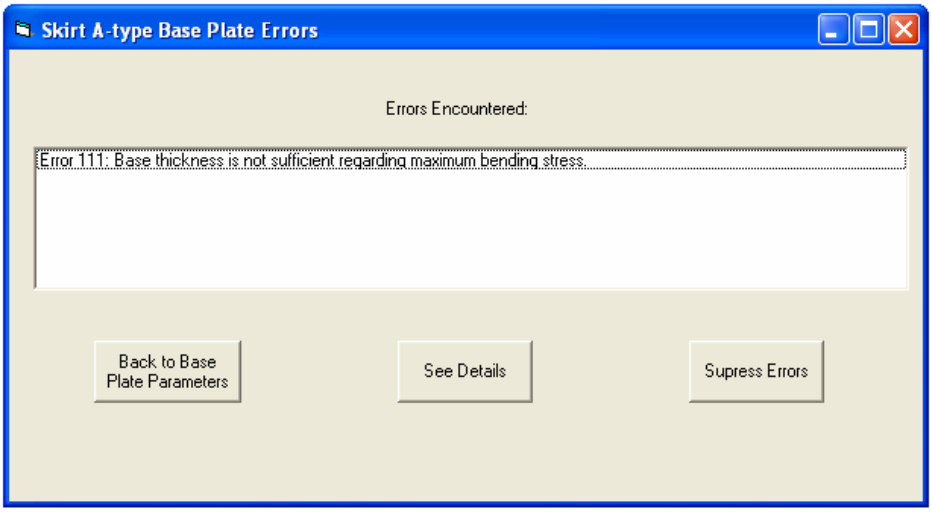

Fig. D.27 – Base plate error screen

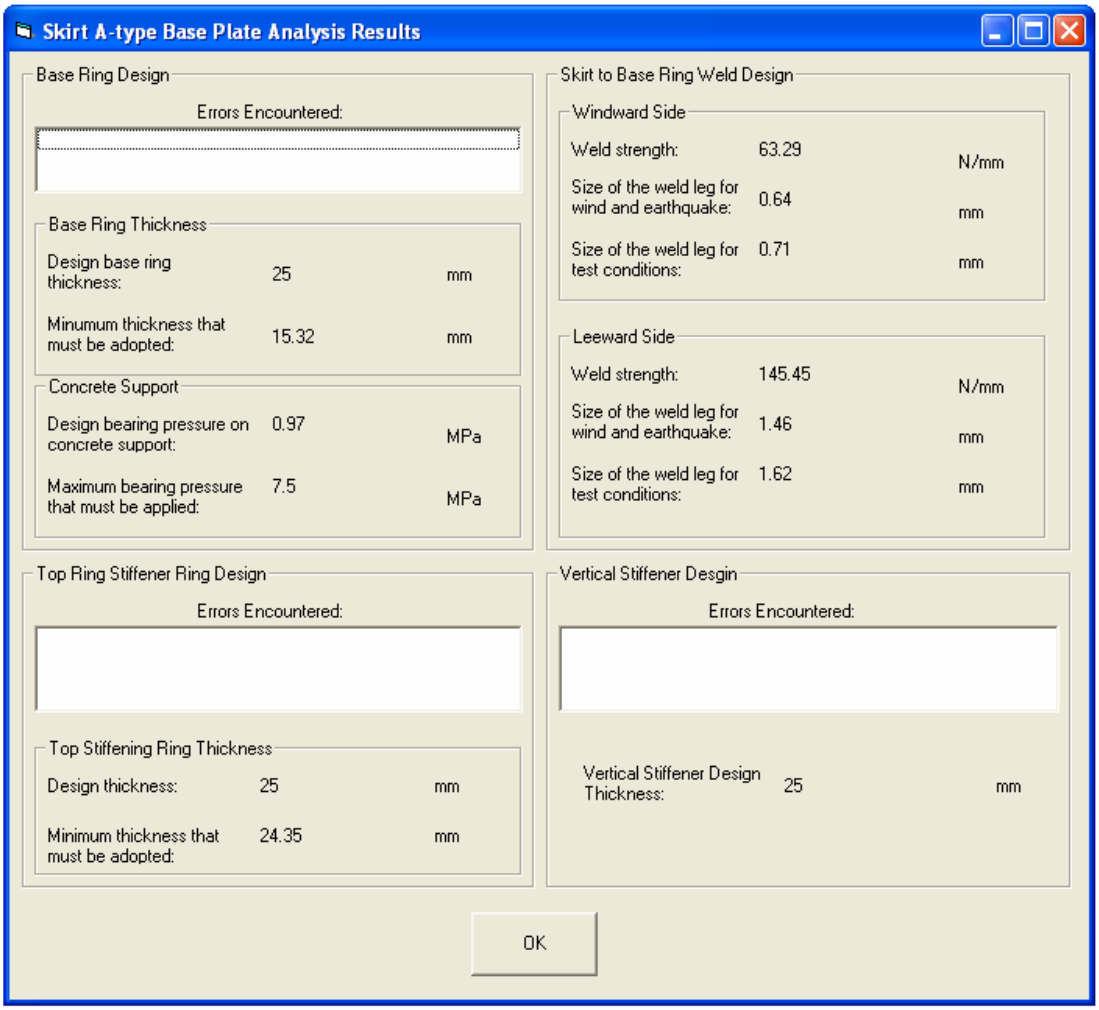

Fig. D.28 – Analysis screen for base plate of type A

D.5.2 – Support Legs

As seen from Fig. D.29, legs can be of pipe cross section which require only diameter and thickness input, and of any other profile provided the relative data is entered correctly. Cross bracings can also be added in this screen.

The *anchor bolt analysis* screen can be accesses through here. Utilizing the simplest method among the ones for skirt anchor bolt selection (as explained in Section 5.3.2), the anchor bolt area is calculated as seen in Fig. D.30 and look up table is also available.

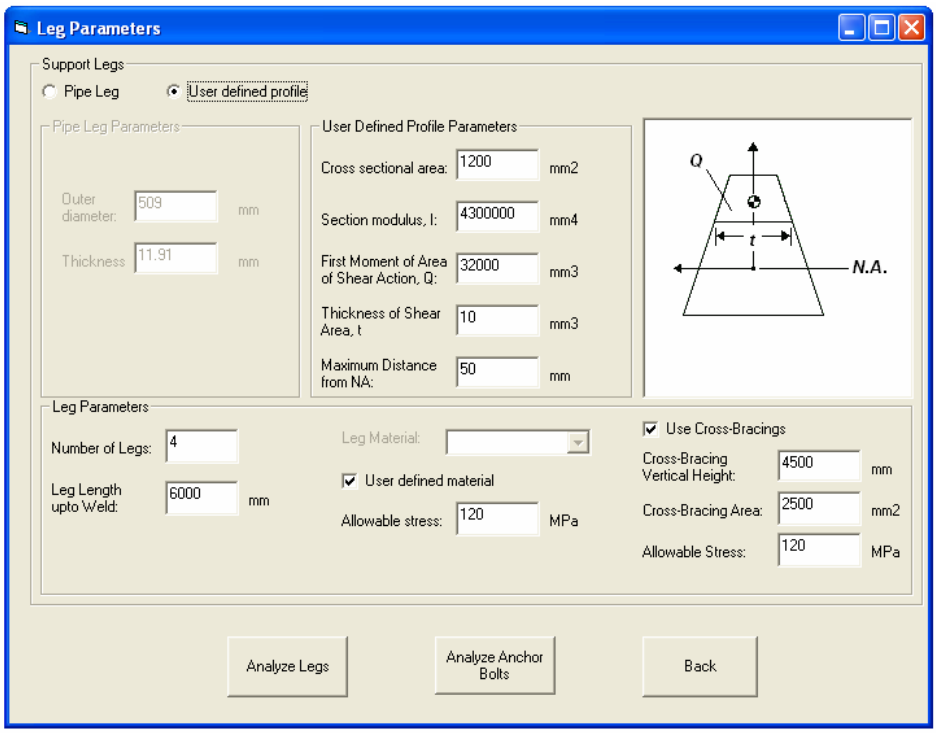

Fig. D.29 – Leg design screen

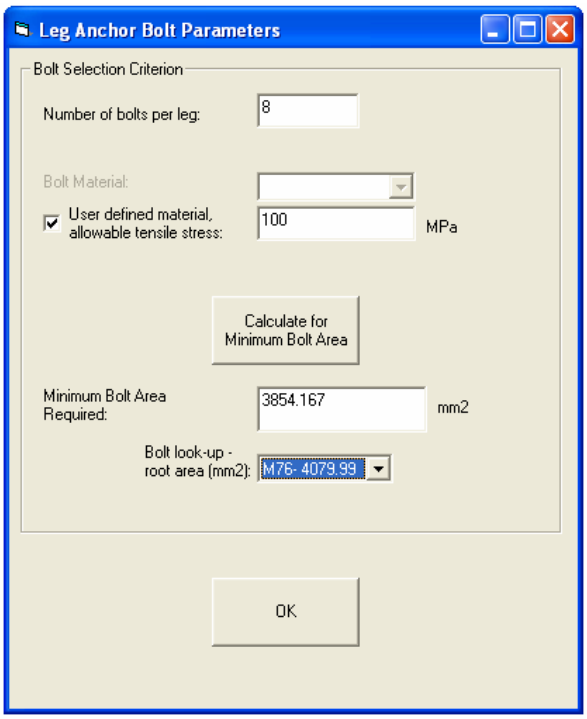

Fig. D.30 – Leg anchor bolt selection screen

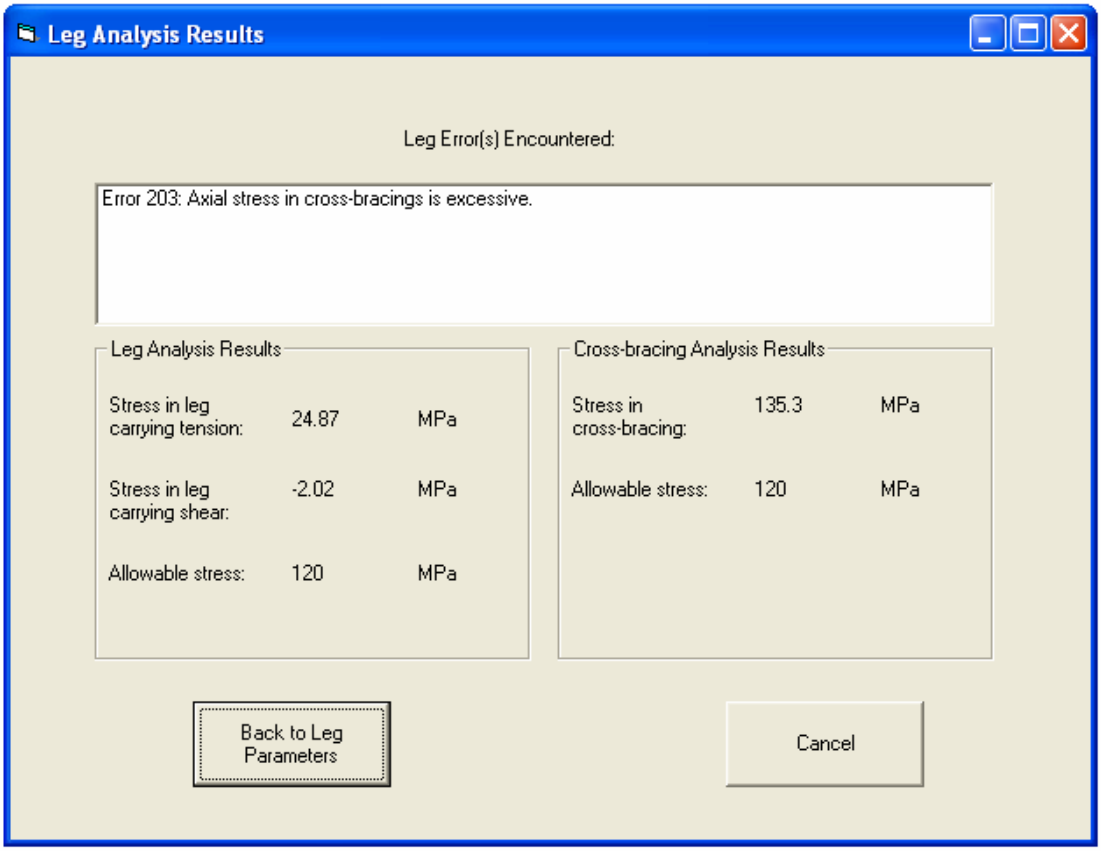

Fig. D.31 – Leg analysis results screen

D.5.3 – Support Lugs

Support lug menu is seen below in Fig. D.32. The user can also analyze girders using this menu, which is a form of lugs with continuous rings, by simply clicking *girder orientation* option. Analysis of lugs can be performed for four different items, namely as top bar, gusset, base plate, and girder stresses as seen in Fig. D.33.

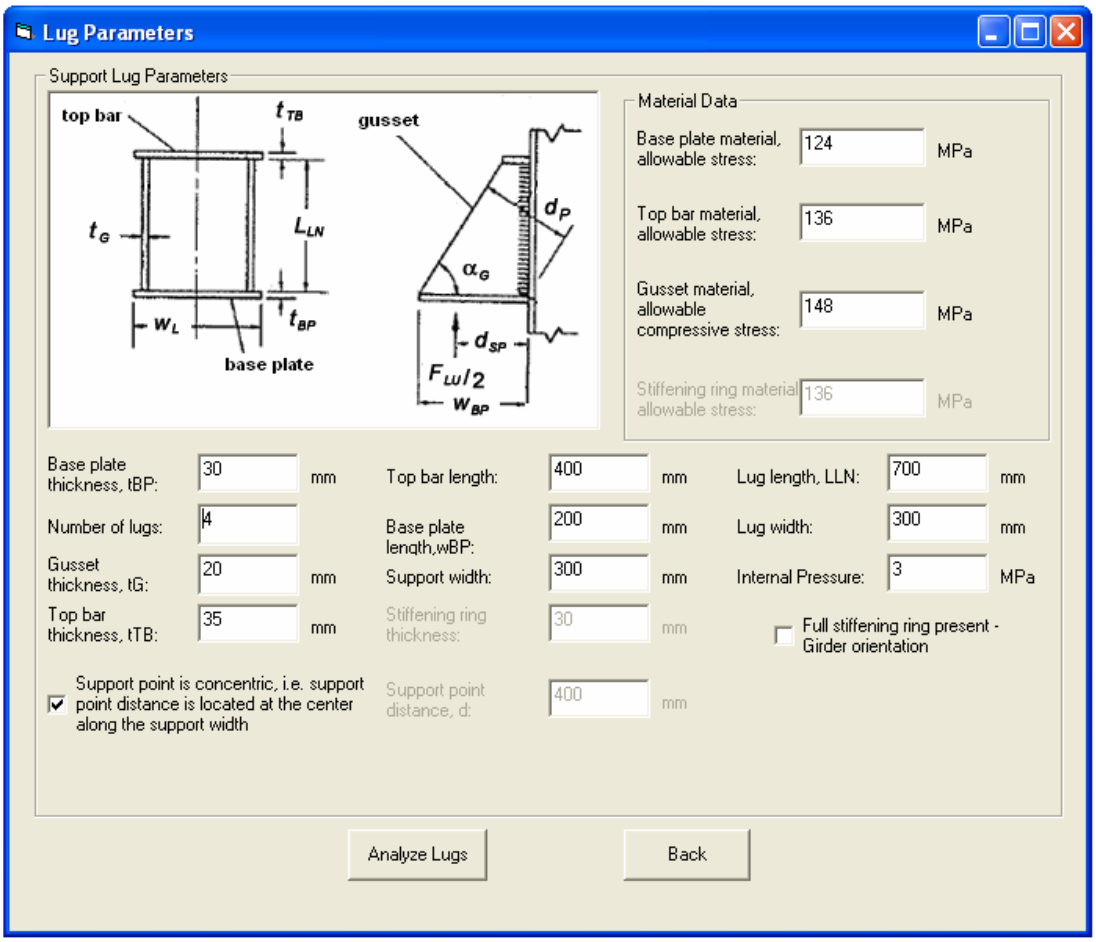

Fig. D.32 – Lug design screen

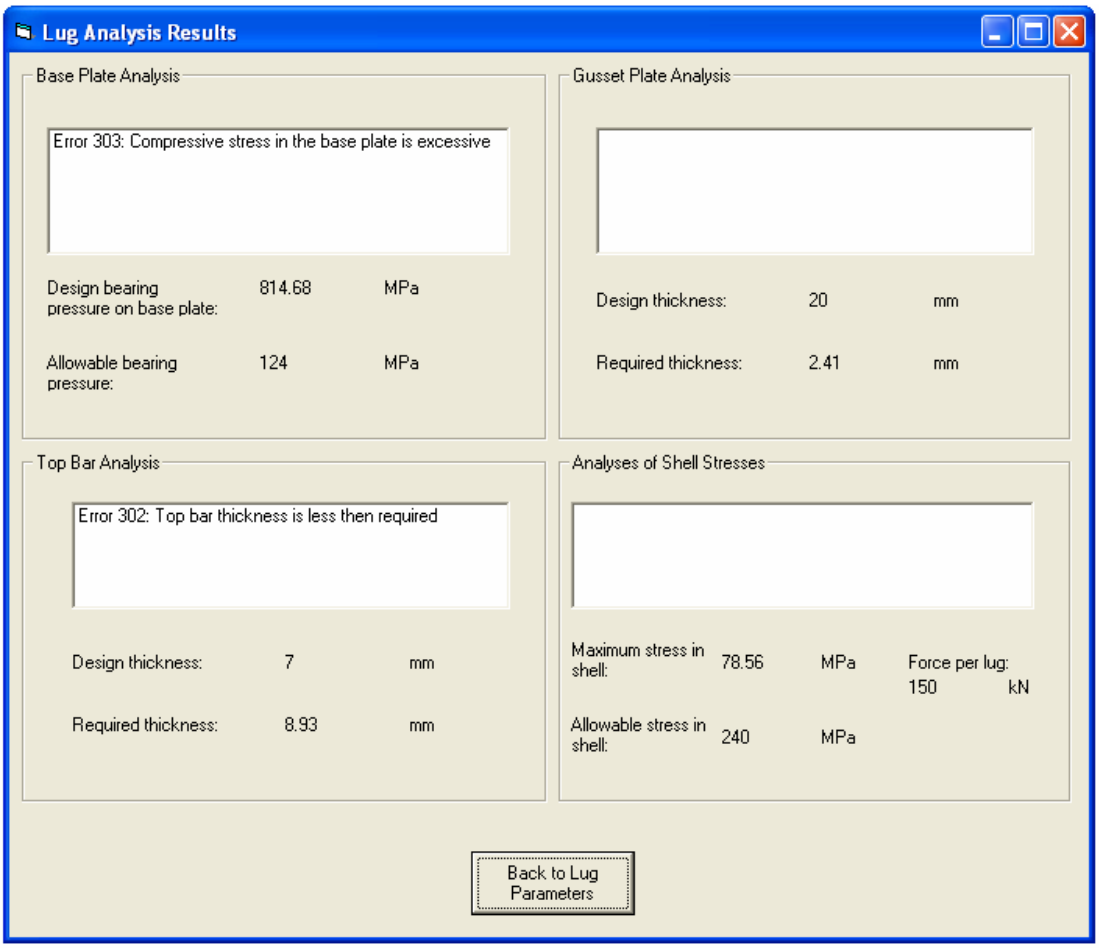

Fig. D.33 – Lug analysis screen

D.5.4 – Saddles

Saddle analysis consists of many items, as seen below in Fig. D.34. Adding a saddle plate, stiffening ring, or bearing plate is performed by clicking these options and *add* commands, which open their menu screens. In Fig. D.35, saddle plate screen is seen, analysis of which can quickly be performed, yielding the analysis screen in Fig. D.36. Similar screens regarding stiffening rings and bearing plates can be seen in from Fig. D.37 to D.40.

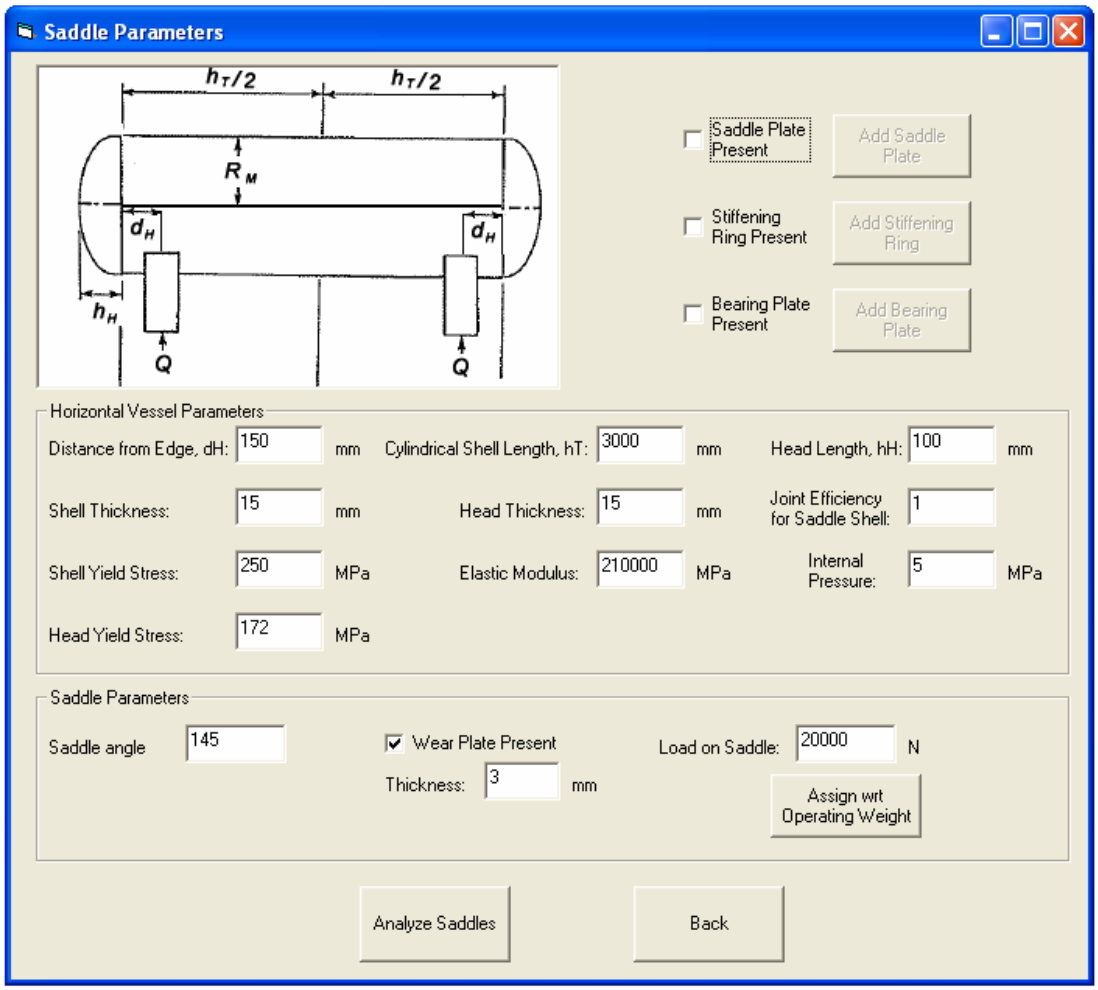

Fig. D.34 – Saddle analysis main screen

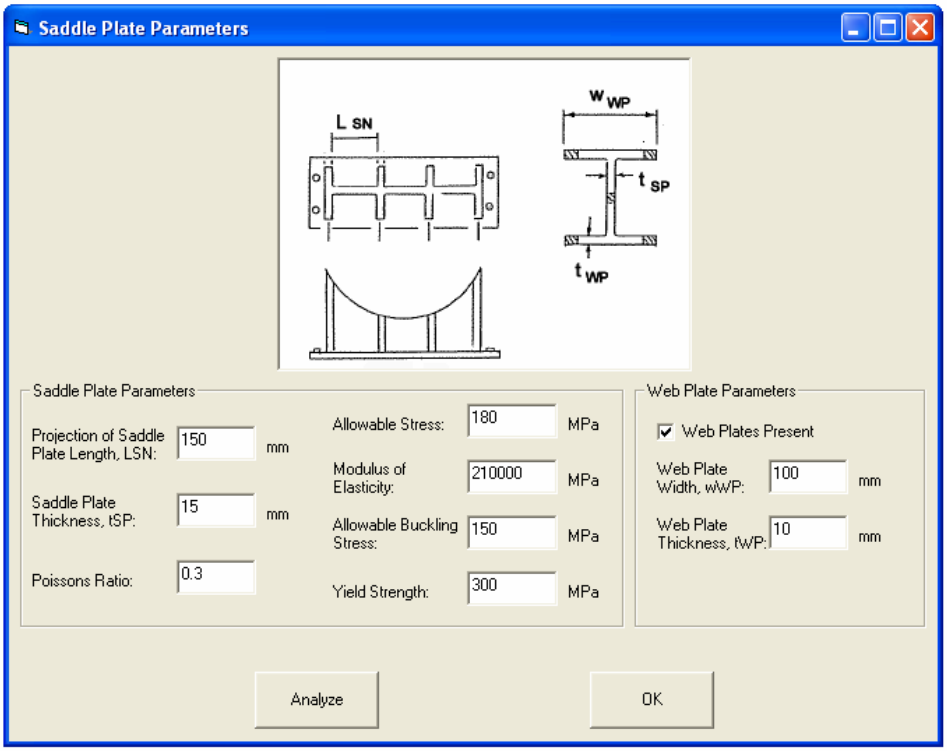

Fig. D.35 – Saddle plate screen

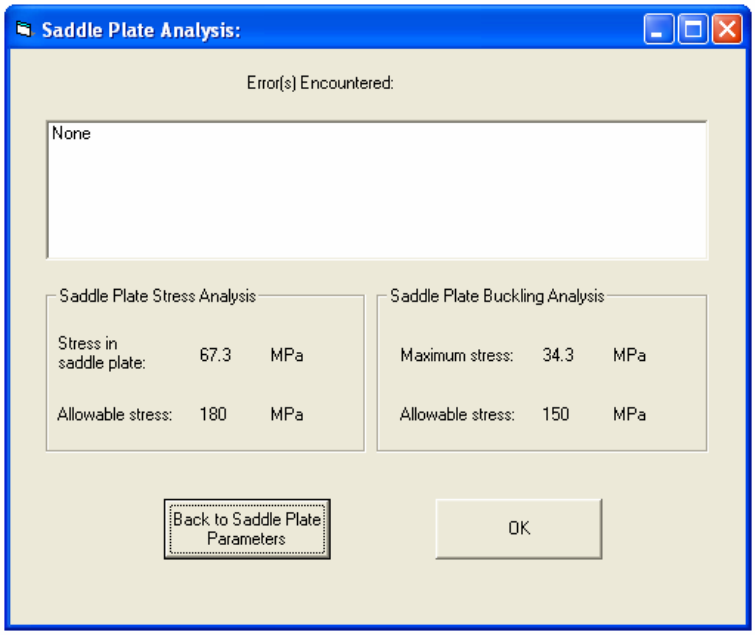

Fig. D.36 – Saddle plate analysis screen

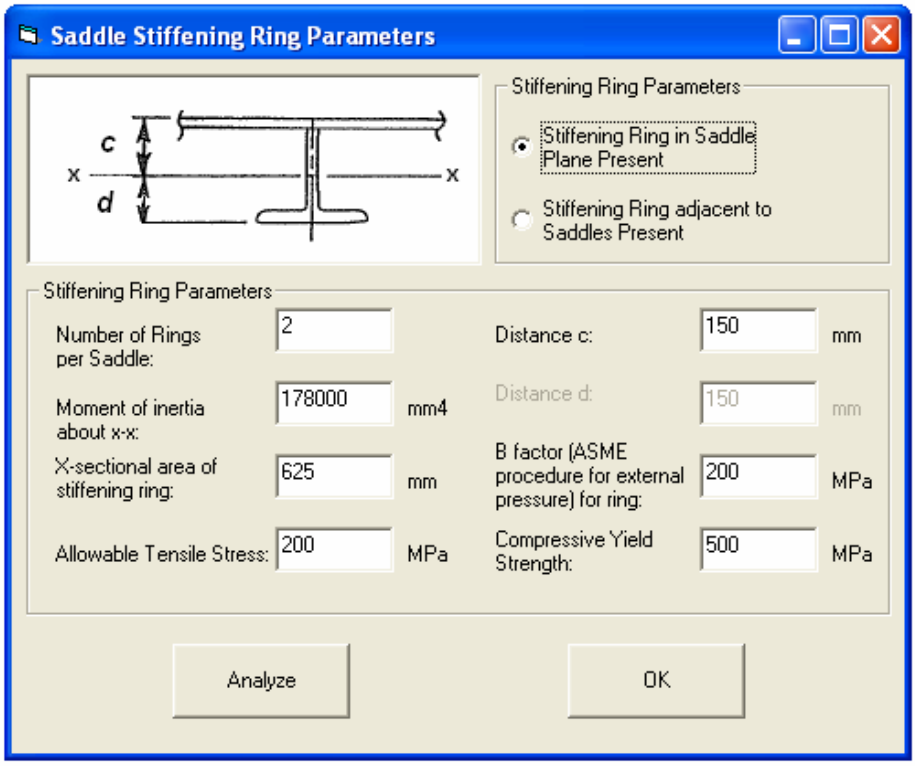

Fig. D.37 – Stiffening ring screen

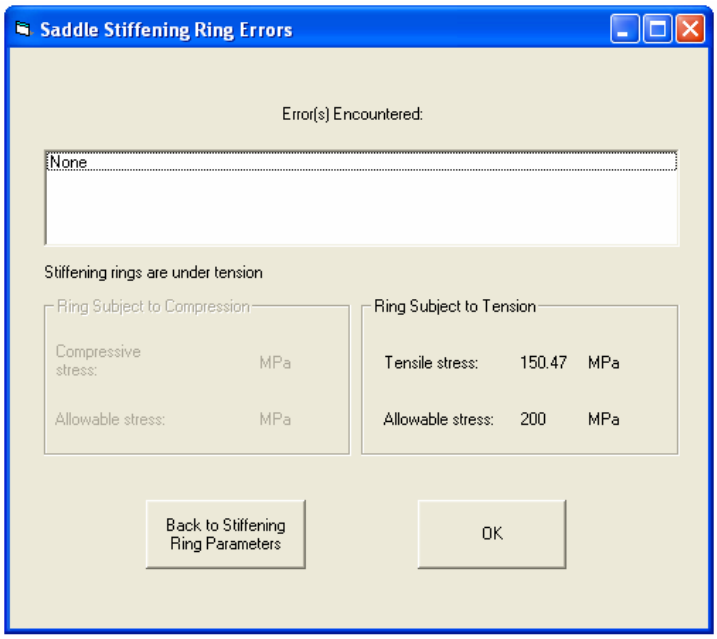

Fig. D.38 – Stiffening ring analysis screen

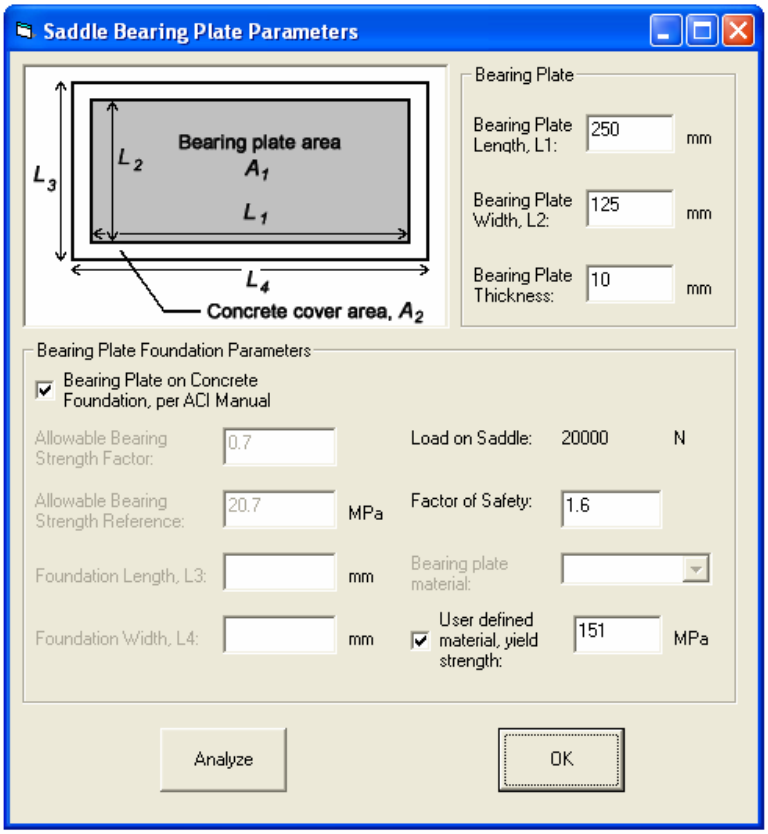

Fig. D.39 – Bearing plate screen

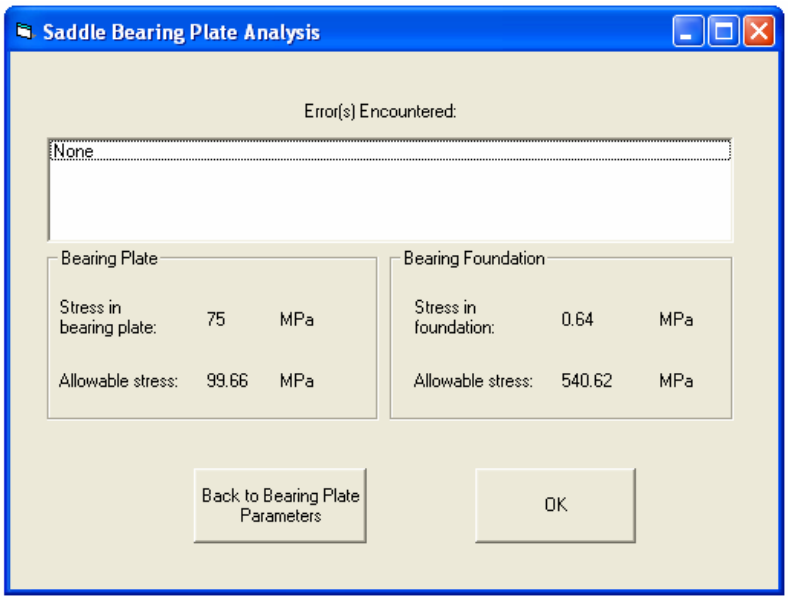

Fig. D.40 – Bearing plate analysis screen

The analysis results of saddle stresses is given in analysis screen as in Fig. D.41, including various design recommendations.

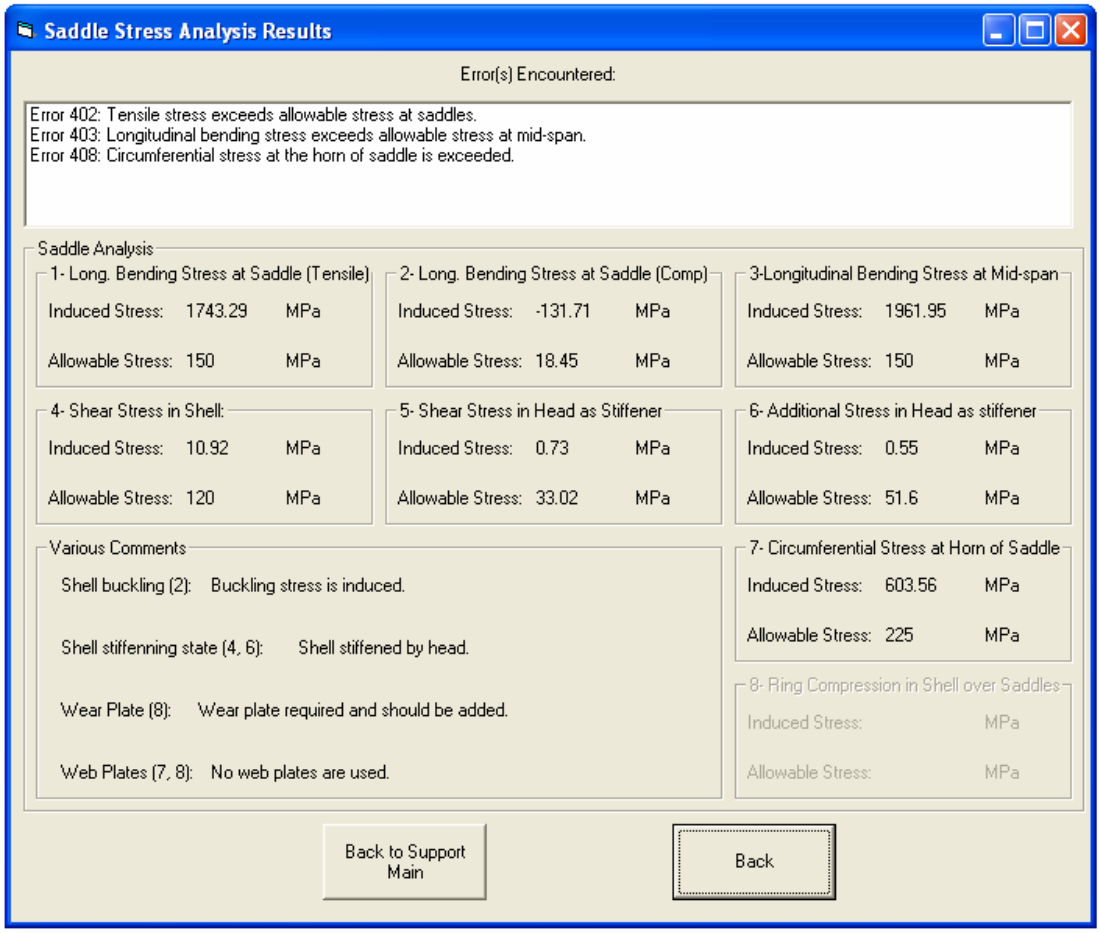

Fig. D.41 – Saddle stress analysis screen

D.6 – RELIEF SYSTEMS

As explained in Chapter 6, many variations and alternatives are available in VESSELAID, i.e. relief for vessels with inflow and outflow or vessels for storage purposes; for various contents. The opening screen of relief analysis is given in Fig. D.43 below.

Relief with respect to fire exposure for gas / vapor systems changes the requirement of a few input parameters, i.e. flow is calculated by fire parameters per some standards. If fire exposure option is not chosen, flow is manually entered per volumetric flow. Fluid to be relieved can also be chosen from database, or required parameters can be manually entered by user. Relief menu for gas / vapor systems is given in Fig. D.43 below.

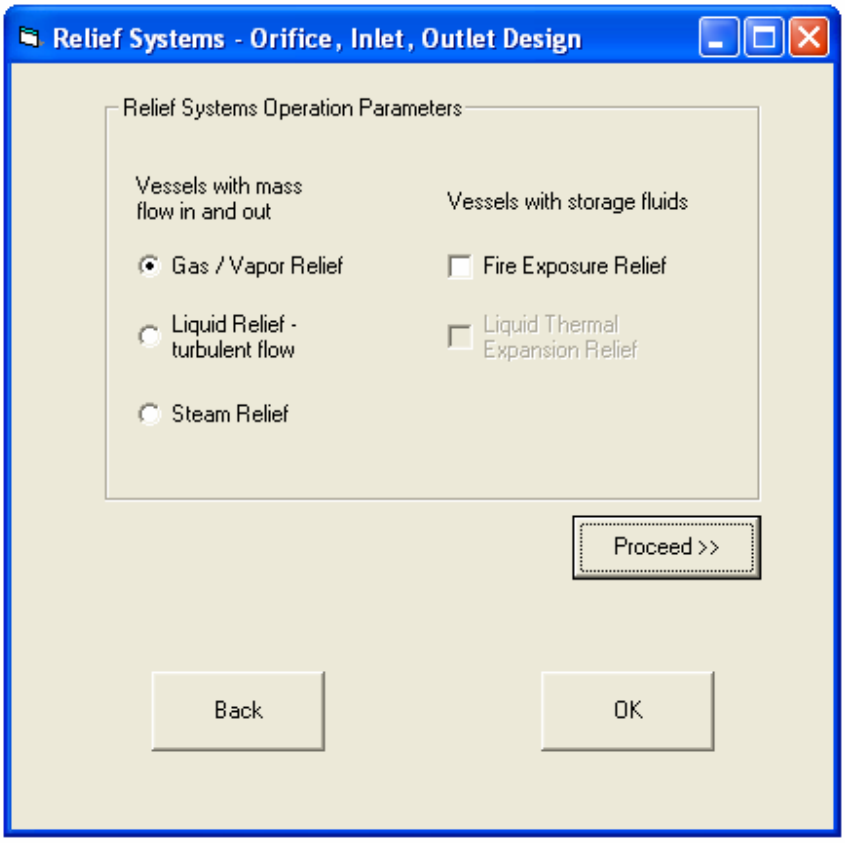

Fig. D.42 – Relief system analysis main screen

Graph regarding backpressure factor can be seen by clicking “See Graph” command. In case of subcritical flow, a warning appears before proceeding, as seen in Fig. D.44.

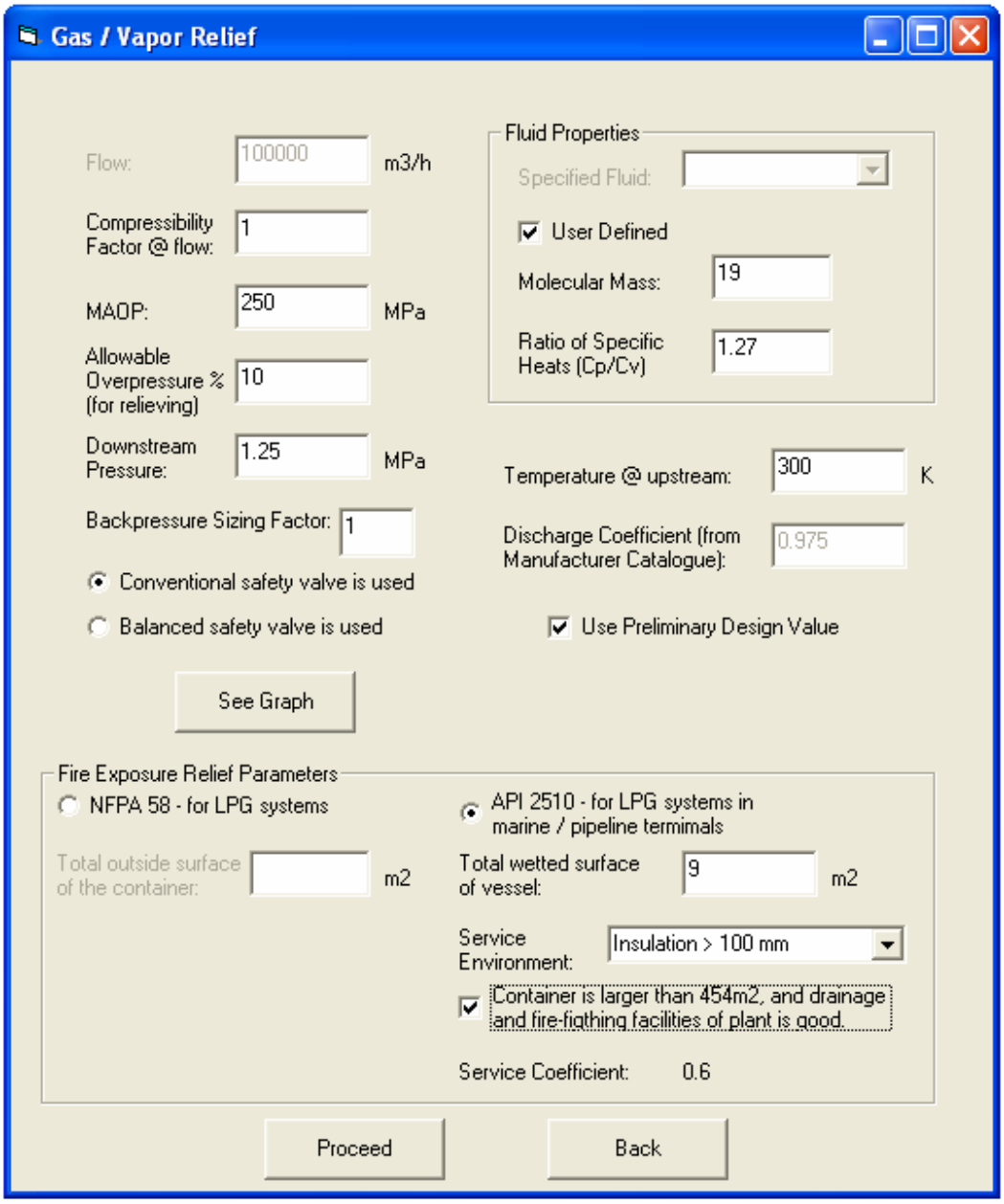

Fig. D.43 – Relief screen for gas / vapor systems and fire exposure

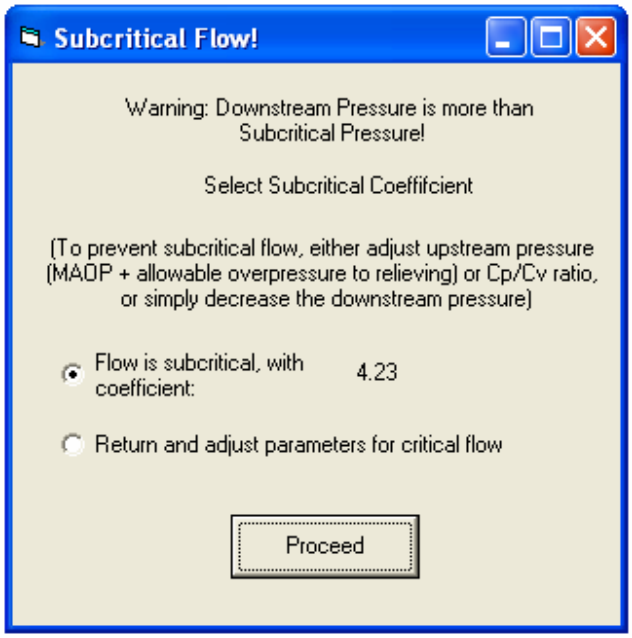

Fig. D.44 – Subcritical flow warning message

Liquid relief and thermal expansion relief differ from each other in a similar fashion to gas / vapor and fire exposure relief. Flow is determined by fluid characteristics and heat input from various sources if thermal expansion is considered. Input screen for liquid relief and thermal expansion is given in Fig. D.45 below. Correction factors can be adjusted utilizing the relative dialog box.

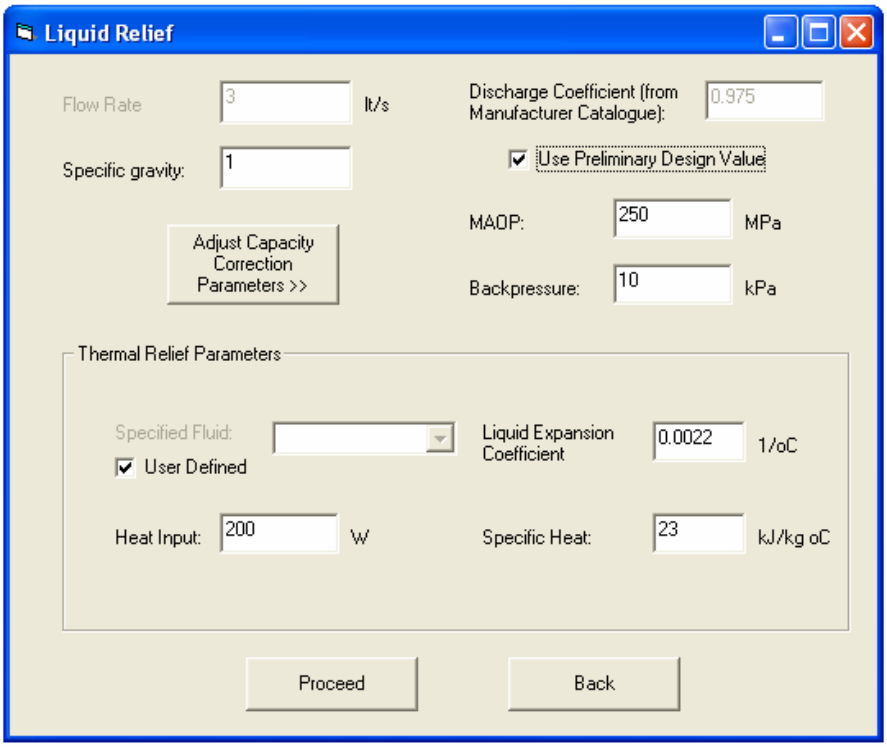

Fig. D.45 – Relief screen for liquid systems and thermal expansion.

Steam relief screen, as seen in Fig. D.46, is relatively easier than screens of other relief systems.

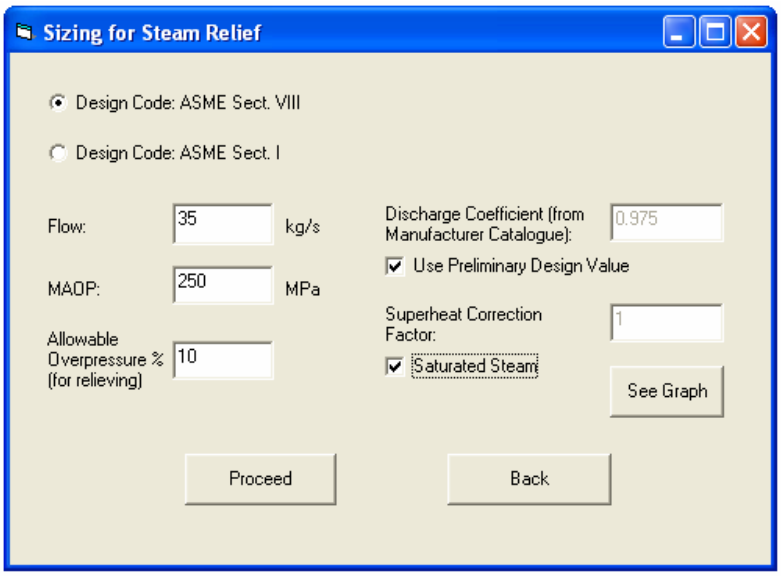

Fig. D.46 – Relief screen for steam relief.

Eventually, VESSELAID calculates the required orifice area for the relief valve, selects the valve with the closest orifice area, and states the available relief valve inlet and outlet diameters, as seen in Fig. D.47.

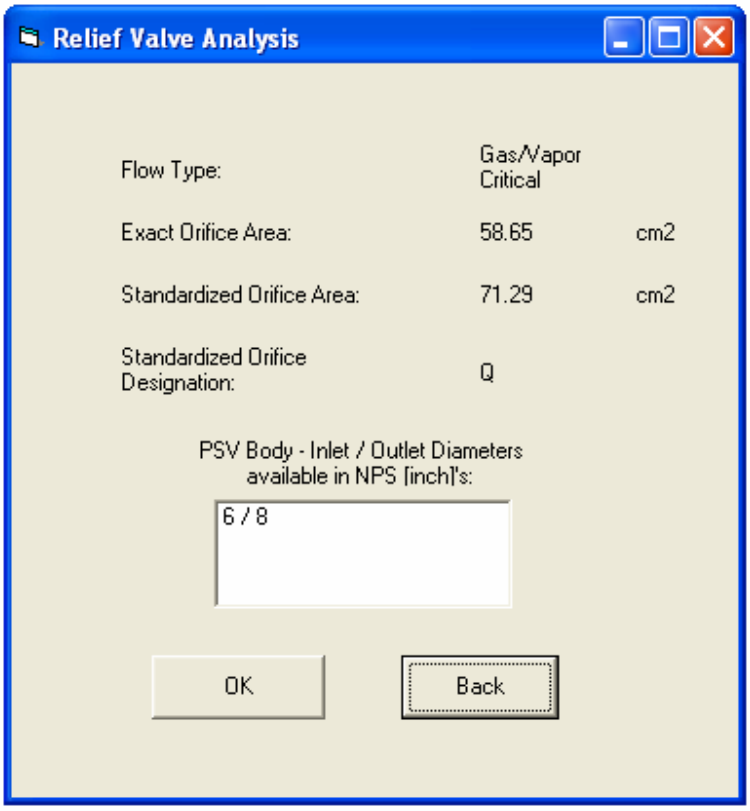

Fig. D.47 – Relief valve analysis screen

D.7 – HEAT EXCHANGER UTILITIES

As described in Chapter 7, VESSEAID's capabilities of heat exchanger design include tubesheets and bellows. The main screen of this feature is indeed the tubesheet design screen, as seen in Fig. D.48 below. After specifying heat exchanger service and design methods, the analysis is ready to be performed. Bellow screen can be accessed through this screen, as seen in Fig. D.49. The quick analysis screen can also be seen in Fig. D.50.

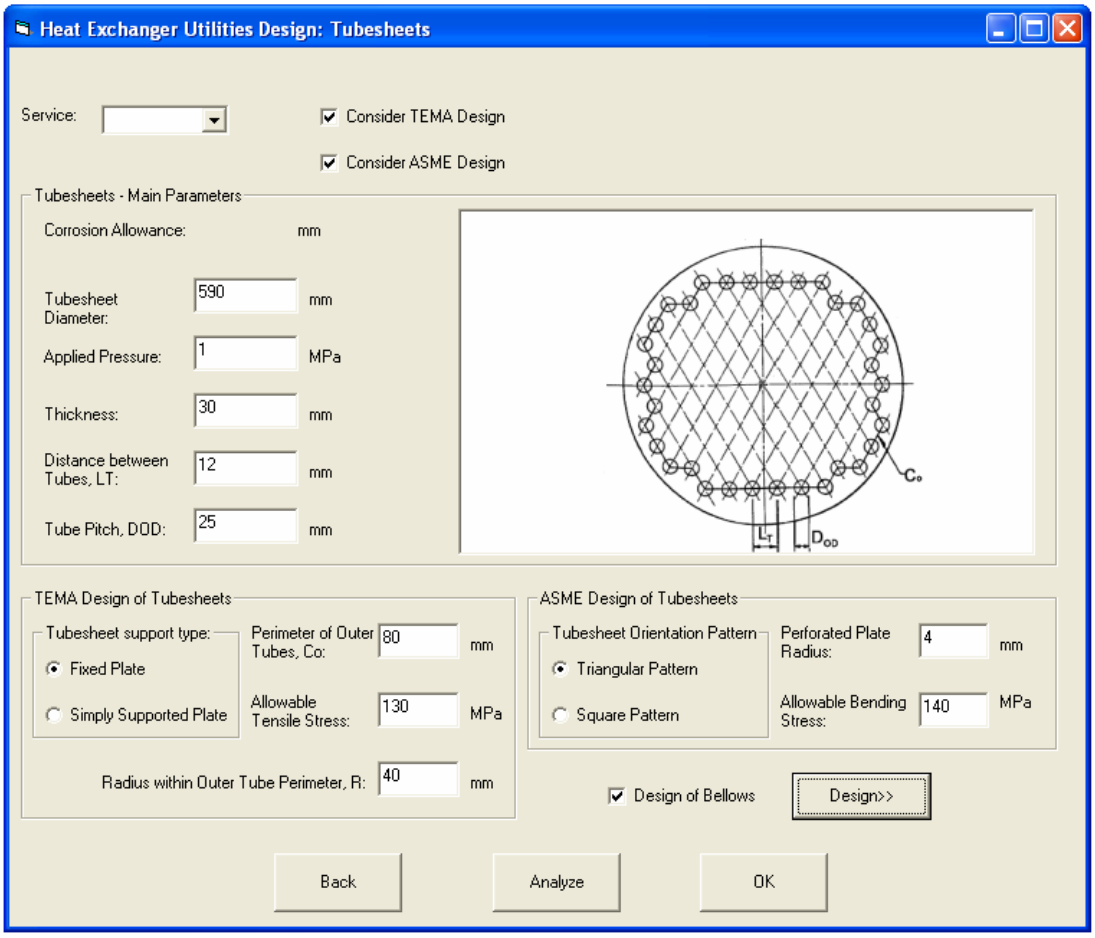

Fig. D.48 – Tubesheet design screen

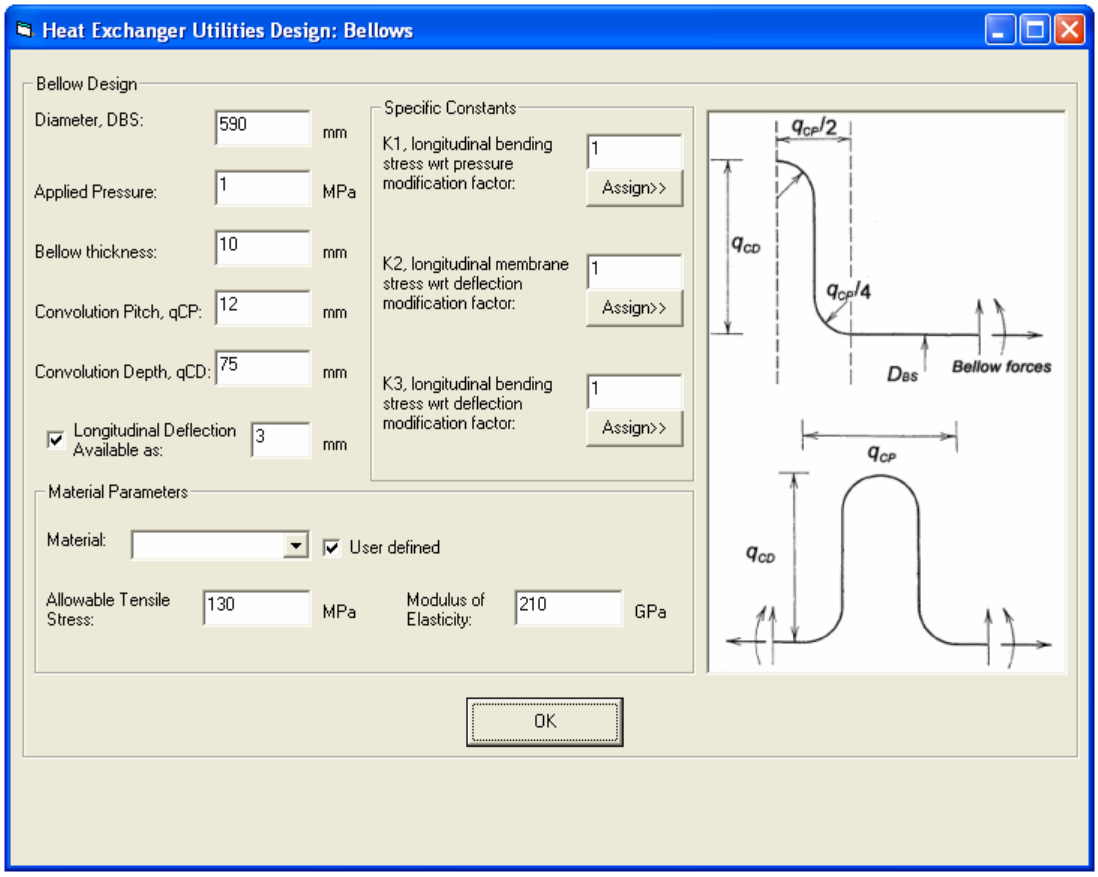

Fig. D.49 – Bellow design screen

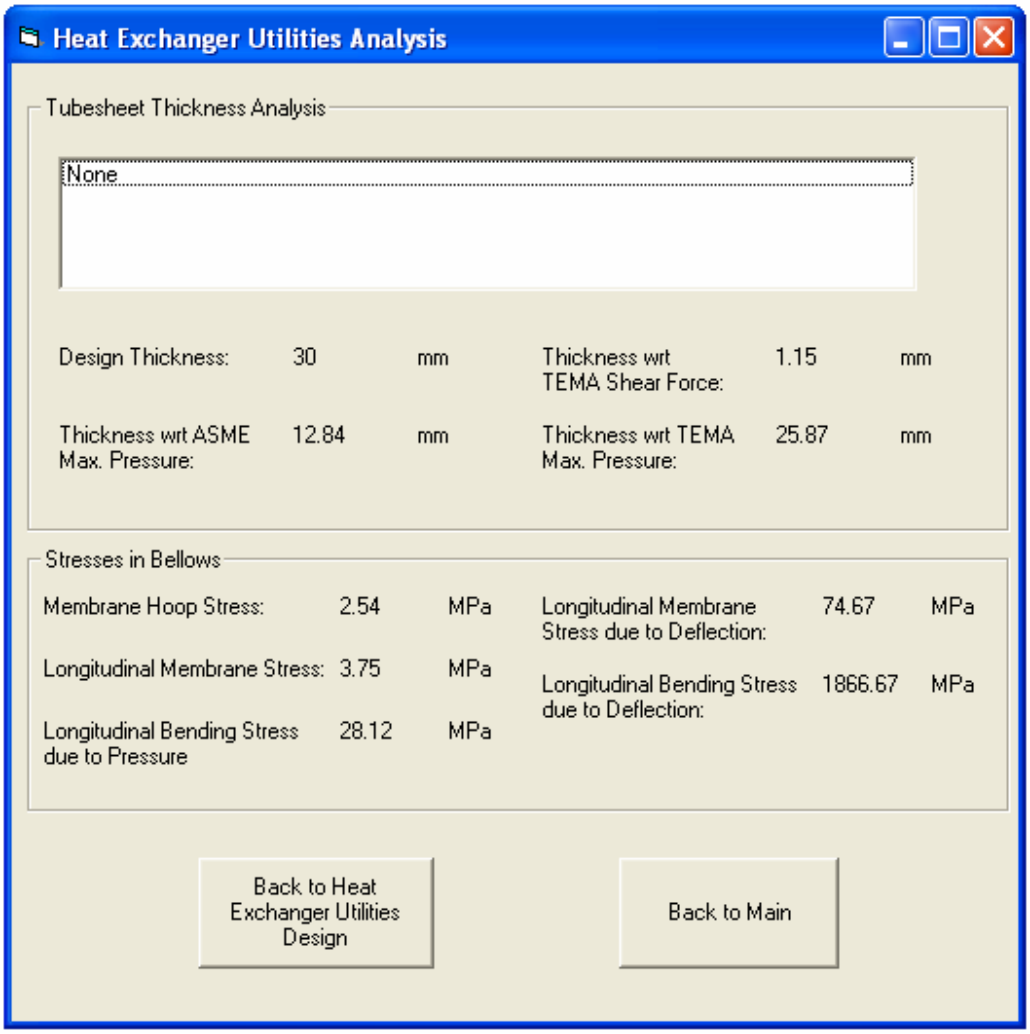

Fig. D.50 – Tubesheet and bellow analysis screen

D.8 – API 650 TANKS

From the main screen of API 650 tank design feature, oil density, roof type, and shell analysis method can be chosen, as seen in Fig. D.51. The analysis of annular plates can also be performed here. The densities of commonly used three oils is in the database, and the user can also specify an oil type by entering its API number or specific gravity manually, as seen in Fig. D.52.

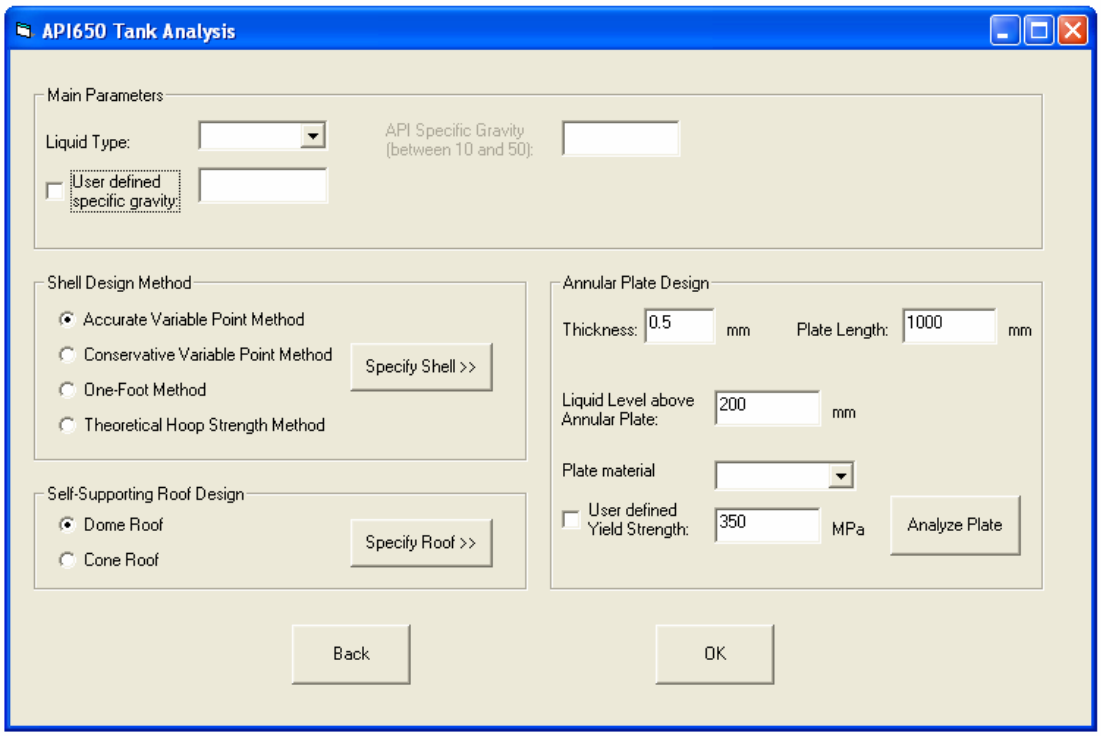

Fig. D.51 – API 650 tank design main screen

Fig. D.52 – Three methods to input stored oil density

As seen in Fig. D.51 and explained in Section 8.3, four methods are utilized to analyze API 650 tanks shell. After selecting any one of them, the screen in Fig. D.53 appears. As well as the material library, *stability check against wind forces* option is also found in this screen.

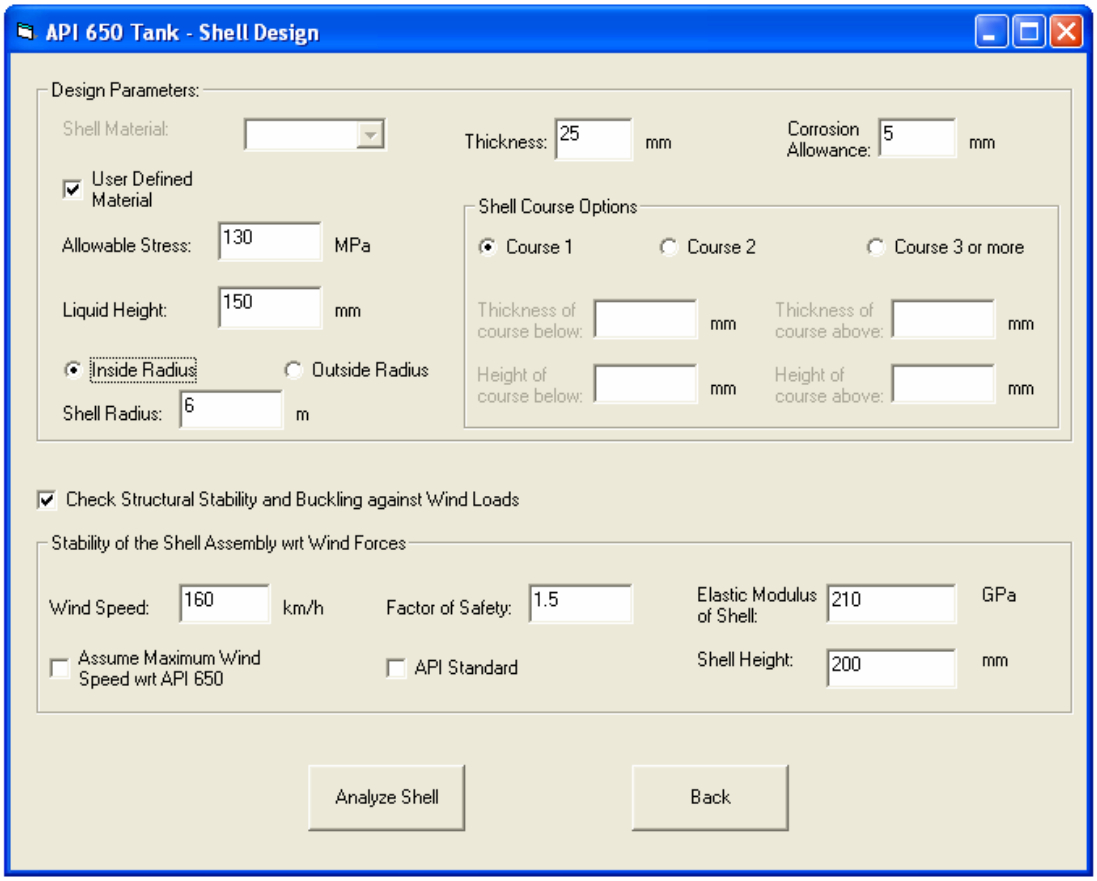

Fig. D.53 – API 650 tank shell design screen

Roof design screen for API 650 tanks consists of many options regarding design. The loads, safety factors, and various parameters that API considers in design can be kept or altered by the user if desired. Roof-to-shell junction and uplift check is also optional as seen in Fig. D.54.

Annular plate, roof, and shell analysis results can quickly be seen in analysis screens by simply clicking “Analyze” commands in the relative screen, as they can also be viewed in the report generated from the VESSELAID’s main menu.

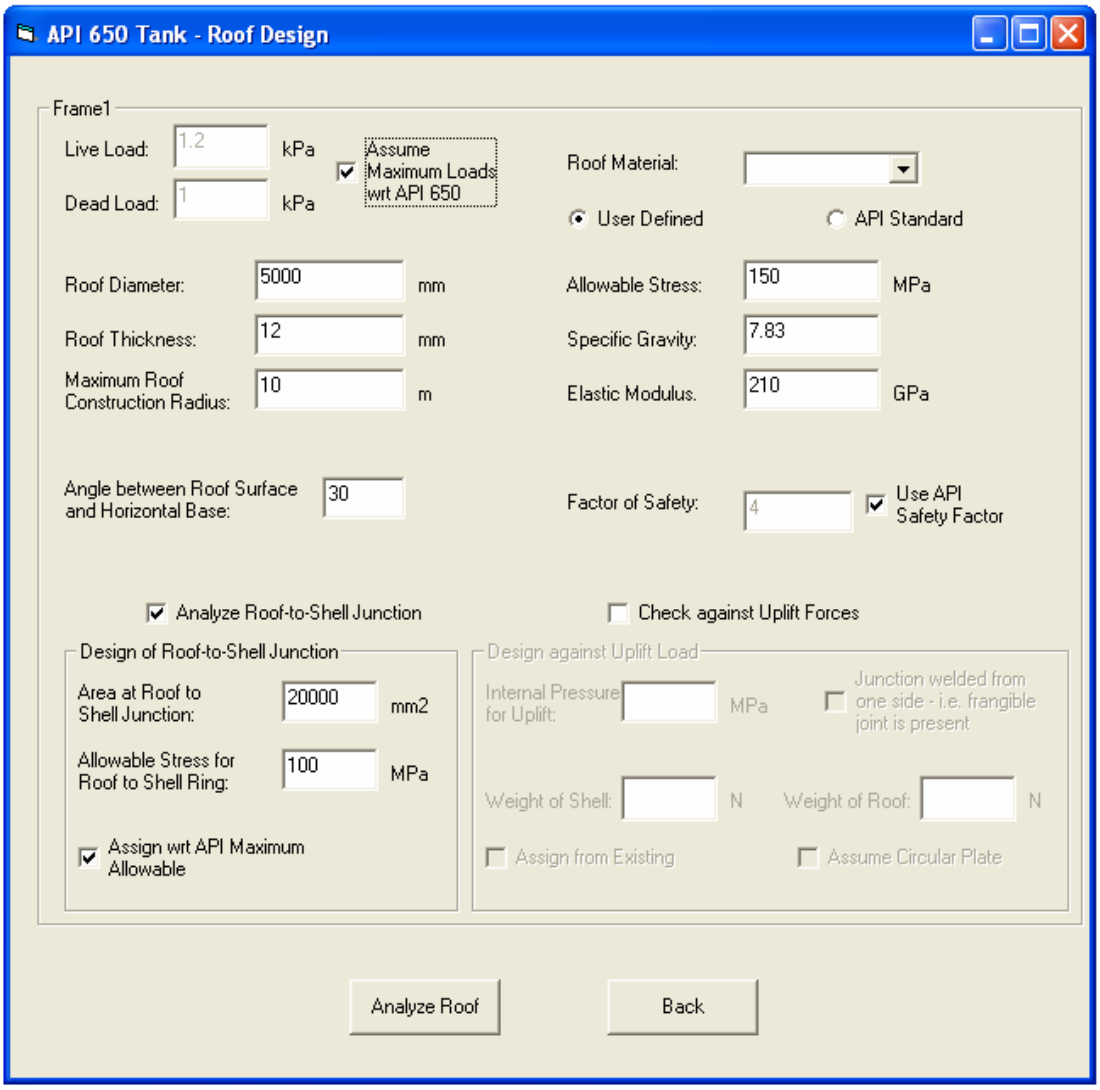

Fig. D.54 – Roof design screen

D.9 – RUNNING, REPORT GENERATION AND MOUSE-POINT TIPS

Running the analysis from the main screen gives the basic inputs and outputs, and errors if any. As well as the reports for each feature can be saved as *.doc* or *.txt* files, the whole

report for all the features can be saved also. It is also possible to print the reports directly from VESSELAID. The report screen is given in Fig. D.55.

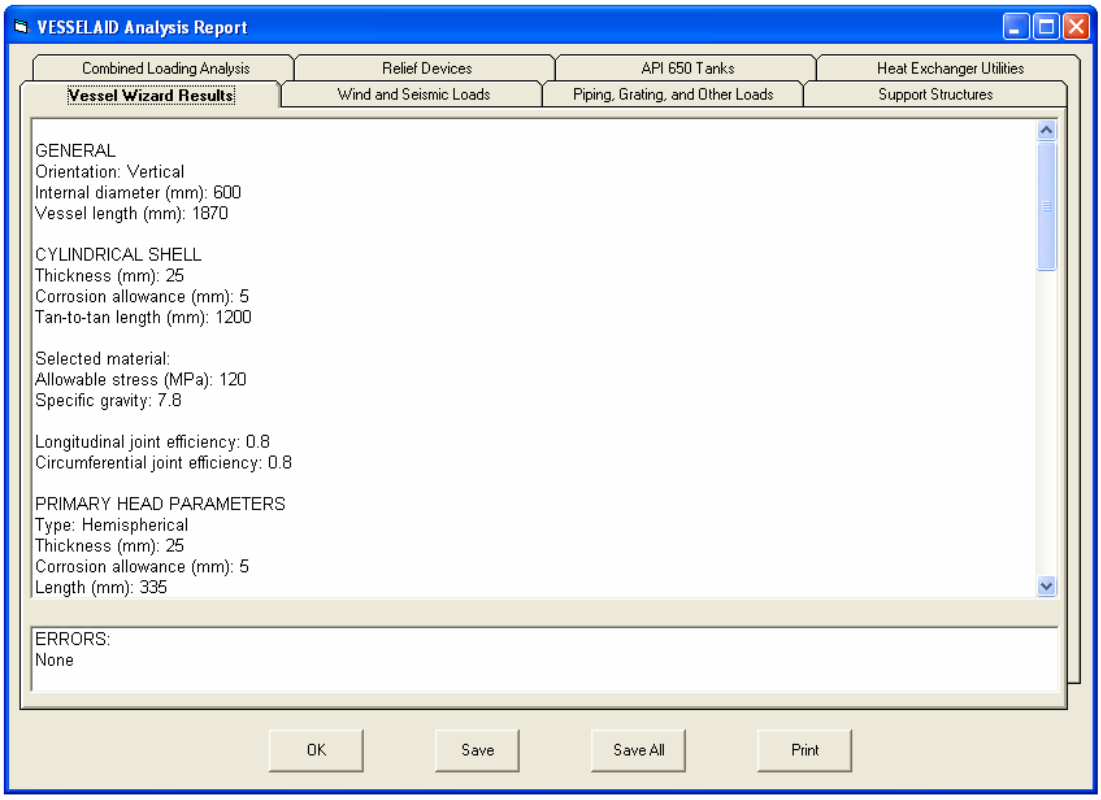

Fig. D.55 – Report screen

For various data, explanations also appear on the screen where the mouse is pointed a while, to guide the user, as seen in Fig. D.56

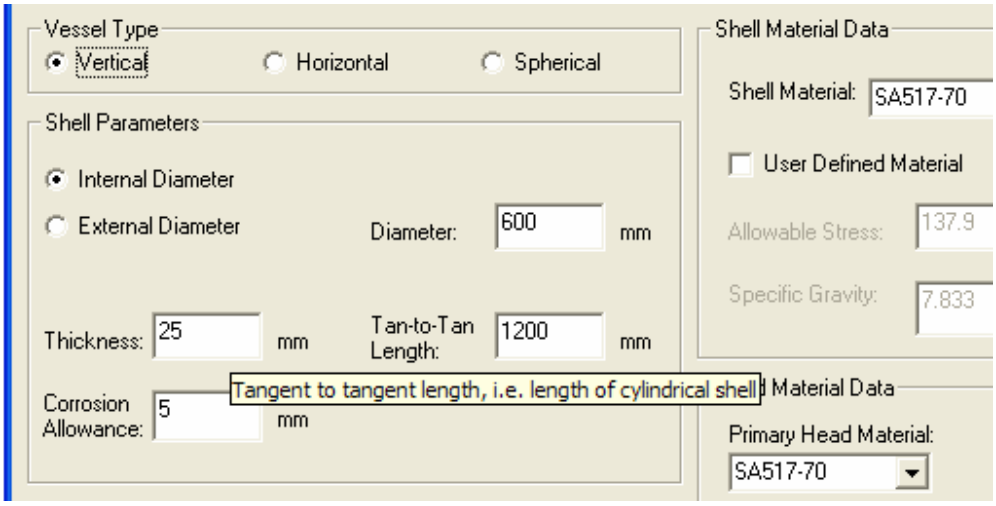

Fig. D.56 - Mouse-point tips