EFFECTS OF INTERNAL, EXTERNAL AND PREFERENCE OF ATTENTIONAL FOCUS FEEDBACK ON LEARNING VOLLEYBALL "TENNIS" SERVE OF 12-13 YEARS OLD CHILDREN

A THESIS SUBMITTED TO THE GRADUATE SCHOOL OF SOCIAL SCIENCES

OF MIDDLE EAST TECHNICAL UNIVERSITY

BY

DUYGU AYAN

IN PARTIAL FULFILLMENT OF THE REQUIREMENTS

FOR THE DEGREE OF MASTER OF SCIENCE IN THE

DEPATMENT OF PHYSICAL EDUCATION AND SPORTS

SEPTEMBER 2007

Approval of Graduate School of Social Sciences

_____

Prof. Dr. Sencer AYATA

Director

I certify that this thesis satisfies all the requirements as a thesis for the degree of Master of Science.

_____

Prof. Dr. Feza KORKUSUZ

Head of Department

This to certify that we have read this thesis and that in our opinion it is fully adequate, in scope and quality, as a thesis for the degree of Master of Science in Physical Education and Sports

_____

Assist. Prof. Dr. Sadettin KİRAZCI

Supervisor

Examining Committee Members

Assist. Prof. Dr. Yeşim ÇAPA AYDIN	(METU, EDS)	_____
Assist. Prof. Dr. Sadettin KİRAZCI	(METU, PES)	_____
Assist. Prof. Dr. M. Levent İNCE	(METU, PES)	_____

I hereby declare that all information in this document has been obtained and presented in accordance with academic rules and ethical conduct. I also declare that as required by these rules and conduct, I have fully cited and referenced all material and results that are not original to this work.

Name, Last Name: Duygu AYAN

Signature:

ABSTRACT

EFFECTS OF INTERNAL, EXTERNAL AND PREFERENCE OF ATTENTIONAL FOCUS FEEDBACK ON LEARNING VOLLEYBALL "TENNIS" SERVE OF 12-13 YEARS OLD CHILDREN

Ayan, Duygu
M.S., Department of Physical Education and Sports
Supervisor Assist. Prof. Dr. Sadettin Kirazcı

September, 2007, 73 Pages

The purpose of this study was to examine the effects of internal and external focus feedback and their preference on skill learning at age of 12-13 years. Internal focus feedback related with body movements, whereas external focus feedbacks related with movement effects. As a task "tennis" service in volleyball was used for both acquisition and retention measurements. The subjects (N=78) were randomly assigned to three groups which were internal focus feedback group (IFF), external focus feedback group (EFF) and preference groups (PF). To promote learning three practice days and to assess learning one retention day was applied. Also, during these days, both technique of the skill and targeting was tried to measure. In technique measure the IFF group performed better than EFF group in acquisition and retention phases. PF group had similar scores with IFF group in acquisition phase whereas it did not show better performance than IFF group in retention phase. PF group performed better than EFF group in both phases. In product measure, significant differences between attentional focus feedback groups in acquisition and retention phases. This study indicated that for young children

with limited amount of knowledge about a skill internal focus feedback is more appropriate compared to external focus feedback in terms of retention. Being able to choose among internal and external focus of attention also seems to make a difference in retention performance of novice children indicating that active participation on the learning variables is an important concept.

Key Words: Attentional Focus, Internal Focus, External Focus, Feedback, Preference, Acquisition, Retention.

ÖZ

İÇ VE DIŞ DİKKAT ODAĞI GERİ BİLDİRİMİ VE TERCİHİNİN 12-13 YAŞ ÇOCUKLARDA VOLEYBOL "TENİS" SERVİS BECERİSİNİ ÖĞRENMEYE ETKİSİ

Ayan, Duygu
Yüksek Lisans Beden Eğitimi ve Spor Bölümü
Tez Yöneticisi: Yrd. Doç. Dr. Sadettin Kirazcı

Eylül 2007, 73 Sayfa

Bu çalışmanın amacı içsel ve dışsal dikkat odaklanması geri bildiriminin ve bu geri bildirimleri tercih etmenin 12–13 yaş çocuklarda beceri öğrenmeye etkisini incelemektir. içsel odaklanma geri bildirimi kişinin kendi vücut hareketleri ile ilgiliyken, dışsal odaklanma geri bildirimi kişinin hareketlerinin sonucu ile ilgilidir. Beceri olarak Voleybolda "tenis" servisi seçilerek üç gün kazanım ve bir gün hatırlama alıştırmaları ve testleri beş gün ara ile uygulanmıştır. Katılımcılar (N=78) rastlantısal olarak 3 gruba cinsiyet dağılımı göz önüne alınarak eşit olarak dağıtılmıştır. Bu gruplar içsel odaklanma geribildirimi grubu (OG), dışsal odaklanma geri bildirim grubu (DOG) ve geri bildirim çeşidini tercih eden gruplandır (TG). Hareketin tekniği kontrol listesine göre, hedefleme performans ise belirlenmiş hedefe atış yapılarak ölçülmüştür. Teknik ölçümlerinde OG grubu DOG grubundan hem kazanım hem de hatırlama testlerinde daha iyi bir performans göstermiştir. TG grubu OG grubuyla kazanım testinde benzer bir performans gösterirken, hatırlama testinde puanlar IOG grubundan daha kötüdür. TG

grubu her iki testte de DOG grubundan daha iyi bir performans sergilemiştir. Hedefleme performans ölçümünde gruplar arasında istatiksel olarak kazanım ve hatırlama testlerinde anlamlı bir fark bulunamamıştır. Bu çalışma, başlangıç seviyesinde olan çocukların içsel geri bildirim odaklanması ile alıştırma yapmalarının dışsal geri bildirim odaklanması ile kıyaslandığında hatırlama performansına olumlu katkı sağladığını göstermiştir. İçsel ve dışsal geri bildirim odakları arasında tercih yapmanın bu seviyedeki çocukların hatırlama performanslar açısından farklılık yarattığı bulunmuştur. Öğrenimi etkiyelen değişkenler ile ilgili olarak aktif katılım üzerinde durulması gereken önemli bir kavramdır.

Anahtar Kelimeler: Dikkat Odağı, İçsel Odaklanma, Dışsal Odaklanma, Geri Bildirim, Tercih, Kazanım, Hatırlama.

ACKNOWLEDGEMENTS

I would like to express sincere thanks to a number of people who helped me throughout the research. First of all, I am thankful to my supervisor Assist. Prof. Dr. Sadettin Kirazcı for his guidance, advice, criticism and encouragements. My appreciation is also extended to the members of thesis committee, Assist. Prof. Dr. M. Levent İnce, and. Assist. Prof. Dr. Yeşim Çapa Aydın for their suggestions and comments. I would also like to thank my friends Buşra Kurtuldu, Nihal İşçi and my brother Mehmet Levent Olçar for their assistance during data collection and writing procedure of this study. And finally, I would like to thank to my husband Ferit Tolga Ayan and my parents Hürriyet & Hüseyin Olçar who under all circumstances, always encouraged and supported me.

A special thank to my mentor dear Prof. Dr. Gabriele Wulf who encouraged me through my thesis period with enlightening advices and moral support. Her studies wakened my interest at the topic of attentional focus.

TABLE OF CONTENTS

PLAGIARISM iii

ABSTRACT iv

ÖZ vi

ACKNOWLEDGMENTS viii

TABLE OF CONTENTS ix

LIST OF TABLES xii

LIST OF FIGURES xiii

CHAPTER 1

1. INTRODUCTION 1

1.1. Problems of the Study 6

1.2. The Hypothesis 7

1.3. Operational Definitions 7

1.4. Assumptions of the Study 8

1.5. Limitations of the Study 9

1.6. Significance of the Study 9

2. LITERATURE REVIEW 11

2.1. Attention 11

2.1.1. Selective Attention 13

2.1.2. Age and Cognitive Strategies 14

2.1.3. Attentional Focus 16

2.1.3.1. Individual Differences and Attentional Focus 24

2.2. Feedback 26

2.2.1. Augmented Feedback 27

2.2.2. Knowledge of Results 27

2.2.3. Knowledge of Performance 28

2.2.4. Internal and External Focus Feedback 28

3. METHOD 30

3.1. Participants 30

3.2. Apparatus and Task 30

3.3. Procedure and Design 31

3.3.1. Procedure 31

3.3.2. Design ..... .33

3.4. Statistical Design 37

4. RESULTS 38

4.1. Acquisition Phase for Process 40

4.2. Retention Phase for Process 43

4.3. Acquisition Phase for Product 45

4.4. Retention Phase for Product 47

5. DISCUSSION 51

REFERENCES 61

APPENDICES 66

APPENDIX A 66

APPENDIX B 67

APPENDIX C 68

APPENDIX D 69

APPENDIX E 70

APPENDIX F 71

APPENDIX G 72

APPENDIX H 73

LIST OF TABLES

Table 1 Design of the Practice Day 1 35

Table 2 Design of the Practice Day 2 35

Table 3 Design of the Practice Day 3 36

Table 4 Design of the Retention Day 36

Table 5 Statistical Design for Process and Product Experiment 37

Table 6 Levene's Test of Equality of Error Variances 39

Table 7 Descriptive Statistics for Process (Technique) Measurement for Acquisition Phase 41

Table 8 Mixed ANOVA for Process (Technique) Measurement in Acquisition Phase 42

Table 9 Descriptive Statistics for Process (Technique) Measurement for Retention Phase 44

Table 10 Mixed ANOVA for Process (Technique) Measurement in Retention Phase 45

Table 11 Descriptive Statistics for Product Measurement in Acquisition Phase 46

Table 12 Mixed ANOVA for Product Measurement in Acquisition Phase 47

Table 13 Descriptive Statistics for Product Measurement in Retention Phase 49

Table 14 Mixed of ANOVA for Product Measure in Retention Phase 50

LIST OF FIGURES

Figure 1 Half of the Volleyball court, the target area and points 34
Figure 2 Graph of Process Measurement for Acquisition and Retention Phases..... 44
Figure 3 Graph of Product Measure in Acquisition and Retention Phases..... 49

CHAPTER I

INTRODUCTION

The changes in our behavior simplify our life. For example, a baby who crawls on the carpet reflects us a phase of human motor development on the way that extends to a final goal; walking. This process makes the life of the baby easier. She is now more equipped to cope with the environment that surrounds her.

The environment once has become an obstacle, now becomes a playground that aids her to discover new horizons of life. These changes can be realized by learning, which is really a significant part of our being (Schmidt & Lee, 1999). Learning can be seen as a change in the capability of a person to perform a skill that must be inferred from a relatively permanent improvement in performance, is the act of executing a skill, as a result of practice or experience (Magill, 2004).

How, exactly, do babies learn to walk which is a motor skill? How do babies make intentional movements like grabbing their candies? How do they learn to swim? Questions like these caused a branch of science, which is called motor learning.

In babies' early stages of lives, the basic learning activities begin with brain-muscle coordination. In this period, they usually can not have their bodies' full control. If they are alone, they can not be fed, they can not move, or protect themselves. These basic activities are necessary to survive their lives. They should learn these motor skills to adopt the life. In this point, there are processes that associated with practice or experience leading to relatively permanent changes in the capability for movement (Schmidt & Lee, 1999). The motor learning helps to acquire new motor skills, so these mentioned processes can be achieved throughout our life.

The motor learning in other words, is the study of the processes involved in acquiring and refining motor skills and of variables that promote or inhibit that

acquisition (Coker, 2004). It provides some basic vital activities to survive our life, such as learning feeding, walking, speaking, etc. Because of this reason, the most effective ways of motor skills learning must be investigated. In this point, factors that affect motor learning move forward as natural candidates to be examined. If a person wants to learn a motor skill, what kinds of factors positively or negatively affect her performance/learning? First of all, she must know what the skill is. Then the skill must be defined by instruction. It can be described verbally, only demonstrated or combination of both of approaches can be used. The different modes of instruction can affect the skill learning. Reo and Allen (2004) indicated that mode of instruction affects learning of an exercise program as measured by tests of performance accuracy immediately after instruction and practice and after a 1-day delay. Subjects in the handout group were less accurate and had a greater number of errors than subjects who received live or videotaped modeling and exercise instruction.

After the instruction phase, performer tries to make the skill. If the performer does not take information about the performance, she can not progress. The information a learner receives about the performance of a movement or a skill is called *feedback*. The feedback training has positive effects on motor skill learning. In 2004, Agruss, Williams and Fathallah measured the effect of a feedback training program on lumbar compression during simulated occupational lifting. Two distinct types of feedback were compared: real-time electromyographic (EMG) feedback versus an acceleration index delivered verbally post-lift, and also control group (without feedback) was used to understand the efficiency of feedback training. They found that the verbal acceleration feedback group reduced the peak compression forces more than two times than the control group and the EMG group did not show a statistically significant improvement over the control group.

People can gain information about many aspects of their own movements through various sensory channels. These forms of information are inherent to normal execution of a particular movement. For example, seeing the ball after she has released it

and the feeling that she gets when she begins to lose her balance. In this condition, response produced information that is available to learners from their sensory system both during and as a consequence of performance (Coker, 2004) which is called intrinsic feedback. Intrinsic feedback comes from sources outside a person's body (exteroception) or from within the body (proprioception) (Schmidt & Wrisberg, 2004).

In some situations, the person can not detect using her sensory system to gain information about her performance. For example, the runner trainer might tell the runner what the time score of her is because the runner can not know her score without external information. Likewise, a therapist might tell a clinical patient how much her body swayed during walking because vestibular problems prevent the patient from being able to detect this information. In each of these situations, augmented feedback provides performance information that otherwise would not be available to person (Coker, 2004). Augmented feedback, some times called extrinsic feedback, consists of information that is provided to the learner by some outside source, such as the comments of an instructor or therapist, the digital display of a stopwatch, the hand-marked score of a judge, the film of a game, the videotape replay of a movement, and so on (Schmidt & Wrisberg, 2004).

One of the important categories of augmented feedback is called knowledge of results (KR). It consists of externally presented information about the outcome of the performing a skill or about achieving the goal of the performance. For example, a coach might tell a long jumper that his plant foot was 3 cm. over the take-off board, a therapist could tell a patient the outcome of the functional reach. It has generally been thought that the more KR is provided the more the performance increases, because KR benefits learning (Proctor & Dutta, 1995). Nevertheless, Winstein and Schmidt (1990) have established clearly this prediction is incorrect. They found that learning to perform a complex movement was at least as good when KR was given at random 33% of the time as when it was given on 100% or the learning trials.

An additional kind of feedback information concerns the movement characteristics that led to the performance outcome, which is called knowledge of performance (KP). The important point here is that KP differs from KR in terms of which aspect of performance the information refers to. Whereas KR provides no information about what aspects of the movement contributed to successful performance, KP can provide such information and direct the performer's attention to those aspects that are critical to performance (Young & Schmidt, 1992). Telling a student that his elbow recovery in the freestyle should be higher, or showing an athlete a video replay of a performance attempt are some examples.

It was asked before; if a person wants to learn a motor skill, what kinds of factors positively or negatively affect her performance/learning? One of the most important factors is feedback which affects the skill learning positively. Another important factor is attention. The meaning of attention in daily conversation is well known. In motor learning as a science, attention in the human performance, the conscious or unconscious engagement in perceptual, cognitive, and motor activities before, during, and after performing skills; the human information-processing systems includes limitations to the number of these activities that can be performed simultaneously. A more recent concept suggests that attention involve a limitation in the capacity available to handle information from the environment. If an activity requires attention, the pool of limited capacity must be reserved to its performance or control. Because the amount of this capacity is thought to be limited, the second activity that requires this capacity will interfere with first activity. To overcome this condition, the relevant and irrelevant information can be distinguished. Because there appears to exist a limited attentional capacity, successful performance is dependent on the performer's ability to attend to significant information. Fortunately, we have the capacity to do this through selective attention. The selective attention can be either intentional or involuntary, depending on how a specific allocation has been achieved (Schmidt & Lee, 1999). Intentional selection occurs when we voluntarily choose to attend to one source of information, (e.g.,

listening talking of your friend), while excluding or inhibiting attention to other sources (e.g., the television). An involuntary selection usually occurs as a response to an external stimulus, for example, suddenly paying attention to a loud voice.

People direct their attention to specific features of the environment and to action preparation activities (Magill, 2004). This attention directing process used to selectively attend to specific environmental information is known as attentional focus. As opposed to attentional demands, which concern the distribution of attentional resources to various tasks that need to be performed simultaneously, attentional focus concerns the arranging of available resources in order to direct them to specific information sources. Direction of our attention indicates that our attention focus can be external or internal: attention may be focused on cues in the environment or on internal thoughts, plans, or problem solving activities. (Magill, 2004). More recently, evidence for the relative effectiveness of directing learners' attention to the movement effects has been provided in a series of studies by Wulf and colleagues (Wulf et al., 1998; Maddox, Wulf, & Wright, 1999; Wulf, Lauterbach &Toole, 1999; Wulf, McNevin, and Shea, 2001; Wulf, Shea & Park, 2001; Wulf, McConnel, Gartner & Schwardz, 2002; Totsika, & Wulf, 2003; Wulf, Weigelt., Poulter & McNevin, 2003; Wulf & McNevin, 2003; Zachry, Wulf, Mercer & Bezodis, 2005). Importantly, these studies demonstrated that directing learners' attention to the effects of their movements on the environment (external focus of attention) is more beneficial for learning than directing their attention to the movements themselves (internal focus of attention). For example, Wulf et al. (1998, Experiment 1) manipulated the attentional focus of participants attempting to learn slalom-type movements on a ski simulator. Whereas one group of performers was instructed to focus on the force exerted by their feet (internal focus), another group of performers was instructed to focus on the force on the wheels of the platform (external focus). Also there was a control group without additional instructions. The external focused group was more successful than the internal focused group and the control group.

External and internal focus of attention used in a study as a feedback to understand their effectiveness, which was tried to examine how the effectiveness of feedback for learning of complex motor skills is affected by the focus of attention (Wulf, McConnel, Gartner & Schwardz, 2002). In their study, there were two experiments. In both experiments, two different feedback types referred specifically to body movements (internal focus) and to movement effects (external focus). Both experiments were clear in showing that external focus was more effective than internal focus in skill learning.

A different question was asked whether the advantage of concentrating on the effects of one's movements rather than on the movements' themselves or whether there might be individual differences in the preference and possibly, the effectiveness of the attentional focus. The answers of these questions were tried to find by Wulf, Shea and, Park in 2001. In their study, individual differences in the preference and effectiveness of the type of attentional focus for a balance task were examined. To be able to reach to these research goals, two experiments were conducted. Participants were instructed by internal and external focus of attention equally in the first two days of the practice. In the third day (retention day) most of the participants chose the external focus of attention. Also, those who preferred external focus of attention were more effective in retention than the participants who preferred internal focus.

According to these findings, it can be said that external focus is a more useful feedback type / attentional focus technique than the internal one. Also, the individual differences play a significant role in the relative effectiveness of an external versus internal focus of attention.

1.1. The Problems of the Study

Feedback gives information about the performance of people and also used frequently in skill learning. The effects of different types of feedback were analyzed according to their attentional strategies in many studies. The purpose of this study was to examine the effect of internal, external and preference of attentional focus feedbacks

on learning and performing volleyball service in children of 12-13 ages. According to aim of the study, there were 2 questions; (1) whether significance differences between internal focus feedback and external focus feedback on skill learning at an age of 12-13 years and (2) whether using of preference of the attentional focus affect the level of skill learning at an age of 12-13 years.

1.2. The Hypotheses

1. There was statistically no significant difference between internal focus feedback group, external focus feedback group and preference feedback group in their learning which was measured with 'tennis serve in volleyball checklist' in both;
    a. acquisition phase and
    b. retention phase
2. There was statistically no significant difference between internal focus feedback group, external focus feedback group and preference feedback group in their target performance which was measured by the total score gained by hitting the volleyball ball to the target in both;
    a. acquisition phase and
    b. retention phase

1.3. Operational Definitions

Motor Learning: A set of internal processes that affect relatively permanent change in human performance through practice, provided the change can not be ascribed to human maturation (Kluka, 1999).

Feedback: Sensory information that results from movement (Schmidt & Lee, 1999)

Attentional Focus: A state of focus in which unrelated stimuli are eliminated and related ones are enhanced (Kluka, 1999).

Internal Focus Feedback: Directing attention to the movement themselves (University of Nevada, Las Vegas, 2007)

External Focus Feedback: Directing attention to movement effect on the environment. (University of Nevada, Las Vegas, 2007).

Retention: The act of recalling past experience.

Retention Test: A test of a practiced skill that learner performs following an interval of time after practice has finished (Magill, 2001b).

Process Measure: It is the performance observation about the quality of movement production; requiring the use of complicated instrumentation or the subjective evaluation of an expert (Schmidt & Wrisberg, 2004)

Product Measure: It is the performance observation about the form of movement.

Volleyball Serve: The service is the first attack action in volleyball games.

Tennis Service (Overhead Floater): This service requires standing comfortably with nondominant foot slightly forward. As stepping forward, the ball is tossed directly in front of the serving shoulder high enough. During tossing the ball to this location, it is needed to accelerate the hand to the ball. The ball reaches high and in front of the server as he or she contact the ball. The tennis service is most effective for children when follow-through is performed (Dearing, 2003).

1.4. Assumptions of the Study

- It is assumed that all participants were novice about volleyball.
- It is assumed that all participants followed and were informed about study and skill by the volleyball coaches at the beginning of the test.
- It is also assumed that subjects in preference feedback group asked for feedback based on their interests and needs.

1.5. Limitations of the Study

- The effect of attentional focus feedback on skill learning was determined only for 12-13 years old children not for the all age groups.
- The volleyball serve was done without jumping.
- The height of the net was reduced to 2.05 meters and the distance of the volleyball serve line was shortened to 4 meters due to the participants' age and their physical properties.
- The study was done in an outdoor volleyball court paved with asphalt.
- The participants were not chosen according to height and weight. They were chosen according to their experience level and age.

1.6. Significance of the Study

Feedback is often used especially in motor skill learning, because it gives information about the performance. Also, it is useful for correction or reinforcing of the skill performance. Therefore, many scientific studies were conducted about feedback and its varieties. For example, attentional focus brought a new perspective to the feedback studies.

Attentional focus examines how an individual's focus of attention affects the performance and learning of motor skills. Many studies showed that directing attention to the movements effects (external focus) had more positive effects on performance than directing attention to movement themselves (internal focus).

In two studies, (Shea & Wulf, 1999; Wulf, McConnel, Gartner & Schwardz, 2002) it was used as a function of the attentional focus that it induces. As a different perspective, feedback type can be preferred. In the study of Wulf, Shea and, Park (2001), they used attentional focus instruction for the preference. In the present experiment, the preference of the feedback itself and the attentional focus that it induced will be manipulated to asses the influence of feedback on the learning of sport skills. Also, the effects of attentional focus feedback preference were analyzed for the "tennis"

service in volleyball. As a difference from the other studies, we have chance to compare external and internal focus groups and preference group. So we will able to understand more clearly the effectiveness of regard the individual differences on learning motor skill. Also, tennis serve in volleyball is a different skill for doing research for our country. There have not done many scientific researches about learning "tennis" service in volleyball. This study will be a useful reference for the volleyball coaches who have confusion for which type of attentional focus feedback to use during their professional practices.

CHAPTER II

LITERATURE REVIEW

This literature review is divided two main parts; attention and feedback. In attention part, selective attention was analyzed to understand that how attentional strategy is used. Also, attentional focus which is the main topic of this study, and related researches were explained.

In the feedback part, firstly augmented feedback and then types of it (knowledge of result and knowledge of performance) was clarified. As a related with topic of the study, the external and internal focus feedback and the some scientific articles were investigated.

2.1. Attention

At any moment in time, people are bombarded with various stimuli, only some of which are relevant to current goals and only a few which will ever reach our consciousness. The many stimuli present may each require a different action (actions) that often are incompatible with each other (Johnson & Proctor, 2004). Consider, for example, what is going on during driving a car. The driver must process information from visual displays of the car and the outside world, while at the same time controlling the gear, break pedal, and steering wheel. Driving requires selection among competing stimuli, concurrent performance of several subtasks. The study of attention is concerned with how people are able to coordinate perception and action to achieve goals such as successfully driving a car. The study of attention is a major part of contemporary cognitive psychology and cognitive neuroscience.

From the many years, attention has been concerned with the factors that affect the learning a motor skill. In the motor learning as a science, attention is defined as, in

the human performance, the conscious or unconscious engagement in perceptual, cognitive, and motor activities before, during, and after performing skills; the human information-processing systems includes limitations to the number of these activities that can be performed simultaneously. Attention has the limited capacity that affects the performance when done more than one activity at the same time (Magill, 2004). When the attentional demands of the first task increase, performance on the second task will decline (as cited in Wirth 2004, 11). Eliminates the tasks or information is unavoidable in this condition. So, some theories existed according to this view. The most important and the first theory was the filter theory or bottle-neck theory. This attention theory speculated that while subjected to a continuous flow of information, that flow is blocked at the some point by an attentional filter that distinguishes that which will be processed further and that which will not. Stimuli selected for further processing then pass through the filter in a serial fashion. Because, the filter essentially creates a bottle-neck in the flow of information.

The filter theories have been popular until it became evident that the filter theories of attention did not express all performance situations. So the most popular alternative view proposed that attention limits were the result of the limited availability of the resources needed to carry out the information processing functions. These theories emphasize that we can perform only several activities simultaneously as long as the resource capacity limits of the system are not exceeded. Nevertheless, if these limits exceeded, we meet difficulties during performing the tasks (Magill, 2004.) Theorists have some confusion about where the resource limit happens. Some of them have thought that there is a one central pool, whereas some of them have thought that there are multiple sources.

Central-resource capacity theories balance human attention capacity to one source from which all activities must be stored. An example of central resource theory is proposed by Kahneman (1973). According to Kahneman (1973), the amount of available attention can vary depending on certain conditions related to individual, the

task at and the situation. The available attention is viewed as a general pool of effort, which involves the mental resources necessary to carry out activities. Attention can be allocated to several activities at the same time. The allocation of resources is determined by factors such as the characteristics of the activities, as well as the allocation policy of the individual. This is in turn is influenced by situation internal and external to the individual. This central pool of available resources is the available capacity and can fluctuate according to the arousal level of the individual (Magill, 2001).

Arousal refers to the general state of excitability of a person, which involves physiological, emotional, and mental systems. A too high or too low arousal level will influence the available attention capacity. To exhibit the maximum attentional resources, the person must be at an optimum level of arousal (Magill, 2001).

Multiple-resource theories provide an alternative to theories proposing a central resource pool of attention resources. Multiple resource theories contend that we have several attention mechanisms, each having limited resources. Each resource pool is specific to a component performing skills (Magill, 2004). The fact that two tasks of apparently equal difficulty may have completely different effects when combined with a third task, with one of the tasks causing interference and the other causing none. Such a finding suggests that the tasks draw on multiple, different sources, and that only when the same resources are required by another task will performance show a decrement (Johnson & Proctor, 2004). Our success in performing two or more tasks simultaneously depends on whether those tasks demand our attention from a common resource or from different resources. When two tasks must be performed simultaneously and share a common resource, they will be performed less well than when the two tasks compete for different resources.

2.1.1. Selective Attention

It has been seen that there is a limited attentional capacity, so successful performance requires performer's ability to focus on meaningful information. In theory,

the selection can be random. However, people are able to perform non-random selection. For example, drivers in a junction with traffic lights are able to focus on the lights rather than on other stimuli present in the scene. The mechanism in the charge of selections termed "selective attention" (Selective attention, 2007). The process of selection has been studied exactly in visual search tasks. A visual search target contains a detected target and a large amount of non-targets. A psychophysiological mechanisms named sensory inhibition is an essential factor for selective attention (Kallus, Schmit & Benton, 2005).

2.1.2. Age and Cognitive Strategies

Developmental psychologists have tried to understand the intellectual changes that occur as we grow from infancy through adulthood. They have been generally influenced by psychologist Jean Piaget, who studied and theorized about child development. According to Piaget, a child enters the world with lack of some cognitive abilities of the adult, and increasingly develops these competencies by passing through a series of stages of development. He distinguishes four main stages. First one is the "sensory-motor stage", which occupies the first two years. In this stage, children develop systems for thinking about the physical world. For example, they develop the idea of an object as a permanent thing in the world (Anderson, 1995). The second stage is the "preoperational stage", which includes age of 2 from 7 years. A child in this period can connect in internal thought about the environment. That is, the child is now able to employ mental symbols to re-create or represent previous or current experiences, but these mental processes are spontaneous and lack systematicity (Parsons, Hinson, Brown, & 2001). The next stage is "concrete-operational stage", which spans the period from 7 to 11 years. This stage characterized by children's ability to think logically, but only about concrete problems. Final stage is the "formal-operational stage", spanning the years from 11 to 15 years (participants of the current study were also at this age group). This stage characterized by children's increasing ability to employ logical thought

process. The formal operational thinker is not bound to content and available experience. Rather, this individual is now free to assumption, to hypothesize, and to deal with in the "what if" (Parsons, Hinson, & Brown, 2001).

Cognitive strategy is a characteristic mode of dealing with a task class of tasks. People are capable of achieving various cognitive tasks using many different tactics of almost equal efficiency. Strategies are not abilities because, instead of referring to the "better-worse" aspect of intellectual performance, which is typical of psychometrics, they relate to the manner in which cognitive tasks are performed. There is generally no reason to treat some tactics as better than others; their choice and use is therefore a matter of preference rather than abilities (Sternberg & Pretz, 2005).

As it can be understood from Piaget's developmental cognitive stages, the children's at age of 12-13 years has become an adult conceptually and is capable of scientific reasoning (Anderson, 1995). Therefore, the selection of cognitive strategy can showed similarities for children at formal-operational stage and adulthood. The successfulness of adults in cognitive performance may be related with experience. Kail and Park (1990) put this to test by giving 11 year old children and adults over 3000 trials of practice at mental rotation. They found that both groups sped up but that adults started up faster. However, Kail and Park showed that the adults came into the experiment with what amounted to an extra 1800 trials of practice. The practice curve for the children assumes that they start with about 150 trials of prior practice and that for the adults with 1950 trials of prior practice. However, after, 3000 trials of practice children are a good bit faster than beginning adults. Therefore, while rate of information processing increases with development, this increase may have a practice and not a biological explanation.

Age related declines of selection performance can consistently be measured. Madden et. al. (2004) attributes declines in visual selective attention primarily to a general slowing, which is accompanied by problems in inhibitory process (as cited in Kallus, Schmitt, & Benton, 2005). However, age differences become quite small in case

of simple characteristics and after sufficient practice with the task or with the opportunity for proper preparation for the reaction at hand, like provision of relevant cues (Kallus, Schmitt, & Benton, 2005).

2.1.3. Attentional Focus

Attentional focus is a process that selectively attends to specific environmental information (Coker, 2004). Focusing attention on a particular informational cue especially in the presence of distracting conditions is a basic function of attention control. This is different from selective attention as in tasks of focused attention the relevant cue is known and current. It is important for the practitioners to be able to assist learners in directing their attentional focus to the most relevant sources of task information all times, because people's attentional capacity is limited and this capacity is diminished even further when performers are anxious (Schmidt & Wrisberg, 2004). Nideffer (1995) has suggested some helpful guidelines for doing this. He claimed that people can control two dimensions of attention (as cited Schmidt & Wrisberg, 2004, 215). The first one deals with the direction focus, an internal focus which is the act of attending to own thoughts, feelings or kinesthetic cues, whereas an external focus which is the act of attending to cues or information in the environment during performance. The second one deals with the width of focus-a narrow focus is one that covers a small amount of information, whereas a broad focus is one that is sensitive a large number of cues at the same time (Schmidt & Wrisberg, 2004). Nideffer (1976) describes attention as having either a very broad or a narrow focus (as cited Wirth 2004, 12). He posited that, at any one time, an individual's focus of attention can fall into any one of four categories, which are determined by the width (broad/narrow) and direction (internal/external) of the individual's focus. These four combinations of dimensions: broad external attentional focus, broad internal attentional focus, narrow external attentional focus, and narrow internal attentional focus (Enhanced Performance, 2007). A narrow internal focus is a focus on internal and kinesthetic aspects of performance,

what you might call a 'body-check'. For example, the springboard diver checks his body positions in mid-air, or the runner monitoring his fatigue during an event. A broad internal focus relates to analytical thoughts and strategy development, and is thus extremely relevant to just about every sport. Even distance runners, whose courses of action during performance are extremely limited, develop a kind of strategy for achieving their best performances. A narrow external focus refers to the shifting of one's attention to a solitary cue in the external environment. For instance, the second-placed speed cyclist may direct his focus on to the rear wheel of the leader when gauging the correct time to attempt to overtake. A broad external focus implies an assessment of the surrounding environment. A golfer uses this to measure the prevailing weather conditions (Calming the mind so the body can perform, 2007).

What kind of attentional focus is more effective when learning a motor skill? To answer this question some studies have been done by researchers. For many years, it has been concerned that disadvantage of the paying attention to one's own movements (internal focus attention) can frustrate the motor performance. In recent years, the efficiency of paying attention to cues or information in the environment during performance (external focus attention) was proved in some studies. One of them showed learning advantages of external focus of attention, Wulf et al. (1998, Experiment 1) manipulated the attentional focus of participants attempting to learn slalom-type movements on a ski simulator. Whereas one group of performers was instructed to focus on the force exerted by their feet (internal focus), another group of performers was instructed to focus on the force on the wheels of the platform (external focus). Also there was a control group without additional instructions. The external focused group was more successful than the internal focused group and the control group. There were no significant differences between the internal focused group and the control group. In second experiment, the advantages of external focus of attention were repeated (Wulf et al., 1998, Experiment 2). The participants were required to learn to balance on a stabilometer. One group of participants was instructed to focus on their feet horizontal

(internal), other group was instructed to focus on keeping two markers attached to the stabilometer platform (external) directly in front of their feet horizontal. Although minimal differences between the instructions, the external focused group showed superior balance learning, relative to the external focused group. So these experiments have been early studies that efficiency of external focus attention was proved.

In the another similar study, the benefits of external focus instructions for the learning a golf skill that was pitch shots was found in both practice and retention phases by Wulf, Lauterbach and Toole in 1999. In this study, the different effects of external and internal focus tried to determine on field like conditions. The participants were no experience and they were twenty-two right-handed students (9 women and 13 men). They were randomly assigned to one of two groups, which are internal focus group and external focus group. The external focus group that directed their attention to club movement and the internal focus group that directed their attention to the arm movement performed practice and retention phases. The external focus group showed better performance than the internal focus group in both practice and retention phases.

The external focus is beneficial to learn motor skills during practice and retention phases (Wulf, Lauterbach & Toole, 1999). However, transfer phase also important for many sport skills and branches; because a learned skill may be forgotten in another day or environment. In field area, a study was tried to prove benefits of external focus instructions for learning of a tennis skill (backhand stroke, cross-court) during practice, retention, and transfer (Maddox, Wulf, & Wright, 1999). Learners were instructed to focus on the trajectory of ball and its landing point (external focus) demonstrated a greater accuracy in their shots than did learners instructed to on their back swing and the racket-ball touch point (internal focus). This was seen only practice, but also in retention, as well as in a transfer test in which participants were required to hit the ball to the other side of the backcourt. Also Maddox et al. showed that the advantages of external focus were not seen in movement technique like movement form. External and internal focus groups were similar in the quality of movement technique.

Internal focus has detrimental effects on motor skills (McNevin, Wulf, & Carlson, 2000). In recent years, to prove this idea, researchers have tried to examine the effects of paying attention to one's movements on performance and learning. Wulf and Weigelt (experiment 2) in 1997 conducted research that supported this opinion. In their experiment, performers with no central nervous system (CNS) injuries who had practiced a complex motor skill (slalom-like movements on a ski simulator) during the course of several days were given instructions regarding the optimal movement pattern. Participants were instructed at the start of practice when to exert force within a movement cycle and also instructions that roughly directed the performer's attention to her or his own body movements (internal focus of attention). The researches found that these instructions resulted in decreases in performance. So it can be evidence for the negative effects of concentrating on one's own movements in well-practiced skills.

As we saw, many studies proved effectiveness of external focus of attention. One possible reason of these benefits of external focus of attention was searched in a different perspective. If we make our movements more automatically, we can make the skills more accurately. Focusing, on the movement effect, on the other hand, might allow the motor system to more naturally self-organize, unconstrained by the interference caused by conscious control efforts and this causes more effective performance and learning. Wulf, McNevin, and Shea (2001) were to follow upon on the issue of whether an external attentional focus promotes more automatic control process than those an internal focus. To examine the attentional demands under external versus internal focus conditions, they used a secondary probe reaction time (RT) task. As a primary task, a dynamic balance task (stabilometer) was used with participants instructed to adopt either an internal or external focus of attention. While performing the stabilometer task, performers under different attentional focus conditions were asked to respond as fast as possible with a finger response to randomly presented stimuli. Also they wished to make sure that they could replicate RMSE (root-mean-square-error) and MPF (mean power frequency) data from their earlier experiments where balance records indicated enhanced

balance performance and increased frequency of responding under external relative to internal focus. Results showed that the external focus of attention resulted in increased balance performance (RMSE), increased frequency of responding (MPF), and decreased attention demands (probe RT) relative to the internal focus of attention condition. This indicates a higher degree automaticity and less conscious interference in the control processes related with the balance performance.

Internal focus of attention has not been useful for the automatic control process during learning a skill (Wulf, McNevin, & Shea 2001). Whether it is sufficient not to focus on one's own movements, or whether is critical and more advantageous to focus on the movement effects. Another question is whether the effectiveness of attentional focus strategies would differ on the type of movement effect on which the learner was instructed to focus. The answers of these questions was tried to examine by Wulf, McNevin, Fuchs, Ritter and Toole in 2000. They followed up on the use of attentional strategies to enhance motor performance and learning. They did two experiments. The purpose of the first experiment was to determine whether there are advantages of an external attentional focus related to the effects of one's movements relative to an external focus that is not effects related. Two groups of participants hit tennis balls as a target with one group focusing on the ball coming toward them (antecedent) and the other group focusing on the ball leaving the racket. The results showed that during the practice there were no differences between the groups that focused on the antecedent (oncoming ball) or effects of their actions (ball leaving the performer's racket), whereas the effect group was clearly superior to the antecedent group on the retention test. Second experiment examined whether it is more beneficial if the movement effect is related to the movement technique, relative to the other movement effects (e.g., outcome). The participants with no golf experience practiced hitting golf balls to a target. While attentional focus group was directed to the anticipated trajectory of the ball and the target, another group was instructed to focus on the golf club swing, that is, the movement effect on the implement. The results of the second experiment showed

that participants who were instructed to focus on the club motion showed clear performance benefits in practice and retention, compared to those instructed to focus on the target.

The question is; what will be the learning level of motor skill learning if the usage of the internal focus of attention is prevented? Wulf and McNevin (2003) thought that the advantages of external focus might be achieved by simply preventing learners from focusing on their movements. However, the important question in this regard was whether it was sufficient to prevent learners from focusing on the control of their movements or whether it would actually be more beneficial to direct their attention to the effects of their movements. So, they used a shadowing task to prevent learners from directing their attentional resources to balancing and compared their performance to those of learner instructed to focus on markers attached to the balance platform (movement effect). Participants performed balancing on a stabilometer and they were randomly assigned to one of four groups: the internal focus, external focus, shadowing, and control groups. Participants in the shadowing group were instructed to shadow the story replayed to them while balancing on the stabilometer. Also, a control group without attentional focus instructions or a secondary task was included. Finally results showed that the external focus group was more successful in balance learning. So we can say that learning advantages could not be achieved by preventing learners from focusing on their movements.

Many researchers have made studies about comparison of effects of external and internal focus of attention and they found that external focus of attention is more beneficial than internal focus attention during learning a motor skill. However, Mc. Nevin, Shea and Wulf (2003) investigated these effects when the distance of external focus of attention increased. Purpose of this study was to test the hypothesis that increasing the distance between the body and the action effects might further enhance the learning advantages associated with an external focus of attention. Participants assigned to one of the four groups, which were three external focus groups, which

differed with the respect to the distance between the body (feet) and the markers on the stabilometer each group was instructed to focus on, or the internal focus control group. For one of the external group (near), the markers were closed to the feet, on the other hand, for two other groups (far-outside, far-inside), the markers were further away from the feet. All groups were informed to focus on the markers and to try to hold them horizontal. Finally internal focus group participants were informed to focus on their feet and to try to hold horizontal. Results showed that external focus groups generally performed better balance learning than the internal focus group. Also, far-outside and far-inside groups showed higher-frequency movement corrections than the near group.

As it was seen at the previous studies, the external focus of attention generally caused better performance than the internal focus in skill learning at the practice and retention phases. However, if we add a new situation to a skill, would the external focus of attention be effective or still be effective? Totsika and Wulf (2003) tried to examine whether the attentional focus effect transfer to novel situations. They applied three transfer tests with Pedalo and they divided the participants in two groups (internal focus group and external focus group). The first transfer test tried to examine whether advantages of an external relative to internal focus would be still found if the motor task had to be performed under more stressful conditions than those experienced in practice, such as pressure to perform the task under speed conditions. Participants were wanted to perform the task as fast as possible. In second transfer test, Totsika and Wulf tried to examine the generalizability of attentional focus effects to a novel variation of the skill. Participants were wanted to ride the Pedalo backward under speed pressure. Finally, third transfer test addressed the question of whether attentional focus would persist if the performer was unable to adopt the respective attentional focus. Participants were required to count backward in threes to prevent them from using the attentional focus they have adopted during practice. In conclusion the benefit of external focus did not increase across practice or when the skill of riding forward had to be transferred to novel situations in Transfer 1 and 3. However, the group differences were larger on Transfer

2, that is, the benefits of an external focus were relatively greater when transfer to a novel task variation required.

The effects of attentional focus also have been studied on different body parts' performances. Wulf, Weigelt, Poulter, and McNevin (2003) examined the effects of attentional focus on suprapostural tasks. Participants balanced on a stabilometer and were required to hold a tube horizontal with both hands. In Experiment 1, the purpose was to determine whether the focus of attention adopted for a suprapostural task can affect the performance and learning of the postural task. There were two groups, which were external focus group and internal focus group. The tube contained a tennis ball and participants (internal and external focus groups) tried to hold horizontal the tube. In Experiment 2, there was a similar procedure like Experiment 1, but the tube was empty and there were three groups which were external focus, internal focus, and control group (no given attentional focus instruction). In both experiments, the external focus groups performed more effective retention and transfer than the internal focus groups (and than the control group in Experiment 2). Also, in Experiment 1 the external focus group was superior in keeping the tube horizontal.

Many studies have examined the attentional focus in motor learning perspective. A physiological study was done by Zachry, Wulf, Mercer, and Bezodis in 2005. In their study electromyography (EMG) was used to determine neuromuscular correlates of external versus internal focus differences in movement outcome. In a within subject design, participants were required to perform basketball free throws while focusing either on their wrist motion (internal focus) or the basket (external focus). EMG activity was recorded for various muscle groups of the shooting arm. The results showed that free throw correctness was better when participants adopted an external compared to an internal focus. Also, EMG activity of the biceps and triceps muscles was lower with an external relative to an internal focus. So when individuals adopt an external focus, reduced neuromuscular activity is associated with increased movement accuracy.

A new study was to test the generalizability of earlier attentional focus instruction results to balance performance in patients with Parkinson's disease. Three groups which were external focus, internal focus and control group. The participants were instructed in three different experimental conditions. These conditions are; a. Eyes open, fixed support surface and surround, b. Eyes closed, fixed support surface and surround, and c. Eyes open, sway-referenced support surface and fixed surround. The attentional focus type did not affect the postural stability when participants were in the fixed support surface and surround with ayes open or closed. However, in the sway-referenced condition, instructing the participants with external focus resulted in less sway than instructing with internal focus and no instruction condition. Also latter two conditions produced similar balance scores (Kinesiology, School of Applied Science, 2007).

2.1.3.1. Individual Differences and Attentional Focus

Folks come in all sizes and shapes. They represent different ages, racial groups, genders, and cultural backgrounds. Some have disabilities of a physical or mental nature. People have different temperaments, social influences, and types of life experiences. In addition to these kinds of differences, people have other capabilities that can influence the quality of their motor performance. Some of the factors that may contribute to differences in people's movement performance are abilities, attitudes, body type, cultural background, emotional make-up, fitness level, learning style, maturational level, motivational level, previous social experiences, previous movement experiences (Schmidt & Wrisberg, 2004). All these factors may have an effect on preference of attentional focus. Especially, the factor that learning style may have an important effect of preference of attentional focus. The question was asked whether the advantage of concentrating on the effects of one's movements rather than on the movements themselves or whether there might be individual differences in the preference and possibly, the effectiveness of the attentional focus. The answers of these questions was tried to find by Wulf, Shea and, Park in 2001. In their study, individual differences were

examined in the preference for and effectiveness of the type of attentional focus for a balance task. The two experiments was used to determine that participants practicing a balance task (stabilometer) were asked to find out whether focusing on their feet (internal focus) or on two markers in front of their feet (external focus) was more effective. In experiment 1, there were three practice days. In Day 1 participants practiced both external and internal focus attention technique. In Day 2, participants were wanted to choose more advantageous attentional focus type. In Day 3, there was no instruction to participants about attentional focus. At the end of the Day 1, about equal number of participants choose an internal and external focus as the more effective or preferred attentional strategy. Also there were no differences between the internal and external focus groups in the Day 2 of practice. In Day 3, when asked what they had focused on during retention test, several participants changed their focus of attention from their initial preference at the end of Day 1. In Experiment 2, the participants were provided more practice time. First two days they were practice both internal and external focus of attention and they were instructed to only use the attentional focus they found to be more effective on the first two days. Participants who choose external focus (16 participants) was more effective in retention than preferred internal focus (4 participants).

Individual differences also were studied in a different perspective. Different level abilities of persons may require different instructional techniques. Should the trainers use the same instructional technique for the high skilled and low skilled performers? This question was tried to answer by Perkins, Ceccato, Passmore & Lee in 2003. They examined the influence of internal and external attention instructions on the performance of a pitch shots by golfers who were high skilled and low skilled. Ten golfers in two skill group used a 9-iron to pitch a ball as close as possible to an orange pylon, which was located at distances of 10, 15, 20, or 25 m. from the golfer. In result, highly skilled golfers showed better performance under external focus condition, on the other hand, low skilled golfers showed better performance under internal focus

condition. So, different attentional focus techniques should be used for the different level of skilled persons.

In another study, the effects of attentional focus preference were examined to determine the connection between implicit learning systems and sensorimotor systems (Weiss, 2002). The task, which was the free throw in basketball, was performed according to the two attentional focus strategies (internal and external focus of attention). A novel manipulation included in this design is referred to as the "forced-opposite." There were four testing conditions: (1) "external-focus preferred" the group instructed to use external-focus strategy (EE), (2) "external-focus preferred" the group instructed to use internal focus strategy (EI), (3) "internal-focus preferred" the group instructed use internal focus strategy (II), and (4) "internal-focus preferred" the group instructed to use external focus strategy (IE). The data indicated that EI was the only group that did not show significant improvement during the testing. Because of the instructor's not using their preferred focus of attention caused lack of confidence. This same condition was also valid for the IE group. However, IE has advantage of the external focus of attention during testing. This finding strongly supports those theorists advocating an external focus as a superior strategy that promotes implicit learning process (Wulf, 1999)

2.2. Feedback

Scientists have concerned the best learning ways of motor skills. Some forms of feedback are necessary for motor learning occur. This opinion has been proposed by classical motor learning theories. Feedback used to describe the information a learner receives about the performance of movement or skill. To improve skills, learners generally require instructional feedback about their performance from a movement practitioner. This type of feedback expresses information about aspects of the learner's movements that differ from the desired state of performance. Feedback that occurs naturally during task performance and that learners can receive the information from

their own sensory system is referred to as *intrinsic feedback.* Examples include seeing the tennis ball after you have struck it and feeling you get when you begin to hold the racket in a wrong position. Feedback from an external source is referred to in the motor learning literature as *extrinsic or augmented feedback.*

2.2.1. Augmented Feedback

Augmented feedback is used to describe information about performing a skill that is added to sensory feedback and comes from a source external to the learner performing the skill (Magill, 2004). Examples include practitioners' comments, a videotape replay of the learner executing a skill and the distance, time or score resulting from one's performance that is posted by instructor. There are two types of augmented feedback, which are knowledge of results and knowledge of performance.

2.2.2. Knowledge of Results

Knowledge of results (KR) consists of externally presented information about the product of performing a skill or about managing the goal of performance. For example, saying his or her time score to the runner. In 1930's, Thorndike, who was reported that subjects failed to improve on a line unless they were informed about their performance, established the importance of KR drawing task (Hogan, 1999, 17). In the last years, researches have tried to examine benefits of KR when it is overuse. In such experiments, the provision of KR is manipulated during acquisition and the effects of the manipulations are assessed on delayed no-KR retention or transfer tests. For example, in a study two types of delays was used (Anderson, Magill, Sekiya & Ryan, 2005). At the delay-0, feedbacks were given after each trial, and at the delay-2, feedbacks were given after a delay of 2 trials. Delay 2 group performed a significantly smaller performance decline from the acquisition to retention.

2.2.3. Knowledge of Performance

The second type of augmented feedback is knowledge of performance (KP). This is information about the movement characteristics that led to performance product. For example, saying something to the runner about running technique. KP refers to the "nature of the movement produced" (Schmidt & Lee, 1999, p.415), such as kinematic information about the movement pattern produced.

2.2.4. Internal Focus and External Focus Feedback

Knowledge of performance can be divided into two categories: KP with an internal focus of attention and KP with an external focus of attention. With internally focused feedback, the learner is given kinematic information regarding his or her own body movements. Externally focused feedback directs the learner's attention away from kinematics and to the effects that those movements have on the environment.

External and internal focus feedback used in some studies to understand their effectiveness. A study was tried to examine how the effectiveness of feedback for learning of complex motor skills is affected by the focus of attention it persuades (Wulf, McConnel, Gartner & Schwardz, 2002). In this study, there were two experiments. In both experiments, two different feedback types referred specifically to body movements (internal focus) and to movement effects (external focus). Experiment 1 tried to determine effectiveness of attentional focus on "tennis serve" in volleyball. Participants were novices and as well as advanced volleyball players. The results showed that type of the feedback did not affect the quality of movement, but external focus feedback resulted greater accuracy in both practice and retention. The purpose of the Experiment 2 was to test possible interactive effects of feedback frequency and feedback type on focus of attention. Advanced soccer players were required to shoot lofted passes at a target. External focus feedback resulted greater accuracy than internal focus feedback did and under internal focus feedback conditions, reduced frequency of feedback was helpful, whereas 100% and 33% feedback were equally effective under external feedback

focus conditions. According to both experiment, results showed that external focus feedback was more effective than internal focus feedback in learning motor skills. Also, found that there was a relationship between type and frequency of feedback.

CHAPTER III

METHOD

This study was done with 78 secondary school students. There were three groups which were internal focus feedback group (IFF), external focus feedback group (EFF) and preference (PF) group. Each group completed the study in one week. More detailed information about method will be presented in sections which are participants, apparatus and tasks, procedure and design, and statistical design.

3.1. Participants

There were 78 participants (37 male and 41 female), who are at ages between 12 to 13 years. Also they were secondary school students in Hafize Özal lkö retim Okulu, and they were novice in volleyball. They did not have any prior experience with volleyball tennis serve. The experimenter informed the participants about procedure and aim of the experiment (you can see the instruction in Appendix B). So they were knowledgeable about the purpose of the study.

3.2. Apparatus and Task

The tennis serve in volleyball was used as a task. The experiment was conducted in a regular size out-door volleyball court. The video was camera used to record some of the serves. The ball, which was used during the serves, had a regular size.

To examine the technique "Criteria for Movement Form Evaluation" sheet which included eight criteria, was used (See Appendix C and also see Appendix E) (Wulf, McConnel, Gartner & Schwarz, 2002).

3.3. Procedure and Design

3.3.1. Procedure

To be able to teach performing the tennis serve in volleyball, there were three days of practice. Also, the learning level of the participants was measured after one week of the first practice day, which is called retention day. Before each practice and retention day, the participants were provided to warm up sufficiently. During the skill performing, each participant was tested individually.

To understand the different effects of internal and external focus of attention feedback, two groups (internal focus of attention feedback and external focus of attention feedback) were formed. Also, to determine effects of the preference of attentional focus feedbacks, an additional group was formed. So, 78 participants were assigned randomly in three groups (Internal focus feedback, External focus feedback, and Preference group).

Two volleyball coaches evaluated the performance of the participants. The coaches were given instruction before the experiment about the procedure of the study. Also, they took the feedback list and criteria sheets before the practice day 1.

The instruction was given by a volleyball coach for the all participants before beginning of the practice day 1 (for the instruction look at Appendix B). The instructions emphasized the important aspects of the technique, such as maintaining a shoulder-wide stance, with the left foot placed in front of the right foot (right-handers) and pointing in the direction of the serve; tossing the ball with the left arm; and hitting the ball with the open right hand.

After the instruction, first participant began to perform tennis serve. During this time, other participants left the experiment area to prevent observational learning.

Criteria sheet was used to evaluate movement technique. There were eight items in this sheet. The suitable item or items were marked every second trial of 12 trials by. So there were six criteria sheets for each participant in each day. This procedure was applied by two volleyball coaches.

Each participant took the feedback from one of the volleyball coaches after every two trials. Two types of attentional focus feedbacks were used to provide information that result from movement. First feedback related with directing attention to movement themselves (internal focus feedback) and second feedback related with direction attention to effects of movement (external focus feedback). The feedbacks were chosen by coaches according to weakest movement from two trials of the participants. For example, if the participant showed poor performance about shifting her weight, the feedback was given that related with shifting weight.

The content of the internal and external focus feedbacks were same and the statements were similar for all groups. These two feedback types differ from each other in terms of their objectives. Internal focus feedbacks related to body parts whereas external focus feedbacks related to cues from the environment. For example, in the first feedback, tossing the ball high is explained by using "arm" as a term in the internal focus, whereas tossing the ball high is explained by how the position of the ball is after the movement as a term in external focus (See for feedbacks Appendix D).

It was mentioned before; there were three practice days and one retention day. In the practice days, the "tennis" serve in volleyball was tried to get learned to the participants.

In the practice day 1, in each of the three feedback-type conditions, participants performed 12 trials and, one of four feedback statements was given after every 2nd trial by the volleyball coach. Feedbacks were chosen according to the most repeated error. For the internal focus feedback group, only the internal focus feedbacks were given. For the external focus feedback group, only the external focus feedback was given. For the preference group, they received internal focus feedback, then external focus feedback, and so on (Wulf, McConnel, Gartner & Schwarz, 2002).

In the practice Day 2, the same procedure was applied for the internal focus feedback and external focus feedback groups. For the preference group, before the day,

they were asked their preference about attentional focus feedback (internal focus or external focus). Then they received their preferred feedback.

In the practice Day 3, again the same procedure was applied for the internal focus feedback and external focus feedback groups. For the preference group, before the day, it was asked if they change their preference about attentional focus feedbacks in the practice day 2.

Retention day was performed after 1 week from the practice day 1. In the retention day, all groups performed 12 trials and they were not given any kind of feedback.

3.3.2. Design

The experiment took place on a regular outdoor-volleyball court. The height of the net was reduced to 2 meters and the distance of the volleyball serve line was shortened to 4 meters due to the participants' age and their physical properties.

For the product measurement, in the center of the "opponents" side of the court, a 3-3-m target area was marked with 5-cm-wide colored tape, which was clearly visible from the participants' side of the court. A 4-4-m and a 5-5-m area were marked around the target area. There were 5 different points. 0 points were for the balls out of bounds or hit the net. 1 point was for hitting the ball out of marked area. 2 points were for hitting the ball on 5-5m. area. 3 points were for hitting the ball on 4-4m. area. 4 points were for hitting the ball on the target area.

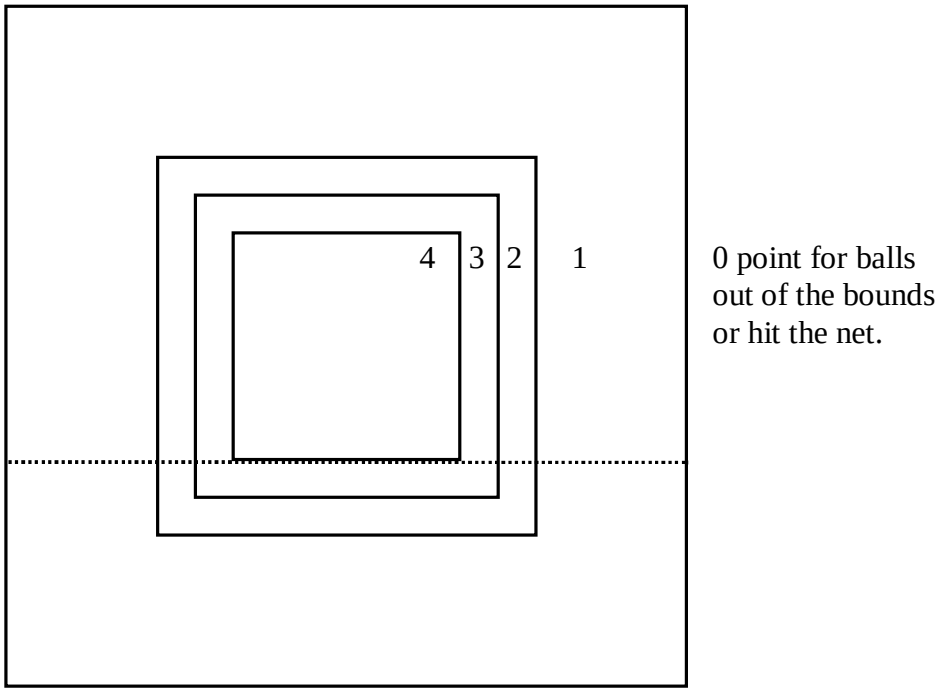

Figure 1: Half of the Volleyball court, the target area and points

In practice day 1, all groups received instruction about tennis serve in volleyball from a professional volleyball coach. Instruction included demonstrating and practicing. After the instruction section practice days were performed following three days; Monday, Tuesday, Wednesday. Participants performed 12 trials in each day. They received a feedback after every 4 trials and volleyball coaches checked the participant performance after every 2 trials. Each participant completed his or her 12 trials in average 5 minutes.

Table 1: Design of the Practice Day 1

	Internal Focus Group	External Focus Group	Preference Group
	12 trials	12 trials	12 trials
Practice Day 1 (Monday)	They received internal focus feedback.	They received External focus feedback.	They received internal focus feedback, then external focus feedback, and so on. After the trials, they were asked their preference about attentional focus feedback.

In practice day 2, for the internal and external focus groups the same procedure was applied. For the preference group, the procedure was changed. Before the trials they were asked, "What kind of attentional focus feedback (internal focus or external focus) do you prefer?" According to the participant's preference, only their preferred feedback type was applied after every 2 trials. And also the participants were given two attentional focus feedback examples to provide understanding more clearly.

Table 2: Design of the Practice Day 2

	Internal Focus Group	External Focus Group	Preference Group
	12 trials	12 trials	12 trials
Practice Day 2 (Tuesday)	They received internal focus feedback.	They received External focus feedback.	They received their preferred feedback. After the trials they were asked change their preference about attentional focus feedback.

In practice day 3, again for the internal and external focus groups same procedure was applied. For the preference group, before the trials were asked them if

they change their preference or not. According to the participant's preference, they received only their preferred feedback type after every 2 trials.

Table 3: Design of the Practice Day 3

	Internal Focus Group	External Focus Group	Preference Group
Practice Day 3 (Wednesday)	12 trials They received internal focus feedback.	12 trials They received External focus feedback.	12 trials They receive their preferred feedback.

The retention day was applied after 1 week later from the practice day 1. All groups did not receive any kind of feedback and they performed 12 trials.

Table 4: Design of the Retention Day

	Internal Focus Group	External Focus Group	Preference Group
Retention Day (Monday)	12 trials They did not receive feedback.	12 trials They did not receive feedback.	12 trials They did not receive feedback.

3.4. Statistical Design

The acquisition data were analyzed using a 3 (Group) x 6 (Block) mixed design repeated measure analysis of variance (ANOVAs) with repeated measures on trial block factor. Each acquisition block was comprised of 2 individual trials. Retention trial data were analyzed using a 3 (groups) x 2 (blocks) mixed analysis of variance with repeated measures on trial block factor. Paired-samples t-test was used as a follow-up test to the mixed design repeated measures ANOVA.

A schematic representation of the statistical design is given in Table 5. Significance level of $p < .05$ was set for all statistical tests.

Table 5: Statistical Design for Process and Product Experiment

Groups	S	1st A.B.	2nd A.B.	3rd A.B.	4th A.B.	5th A.B.	6th A.B.	1st R.B.	2nd R.B.
IFF	S1 - S26								
EFF	S1 - S24								
PF	S1 - S28								

Note: Each block represents average means of 2 trials. IFF: Internal Focus Feedback, EFF: External Focus Feedback, PF: Preference Feedback, A.B.: Acquisition Block, R.B.: Retention Block, S: Subject.

The reliability of the observers was also analyzed before the experiment. This analysis was applied on 5 participants whose performance was recorded by video camera. Two volleyball coaches (observers) checked each participant's performance for inter-observer reliability. Also they checked the each participant's performance two times (there was one week between first observation and second observation) for intra-observer reliability.

CHAPTER 4

RESULTS

The main topic of this study was the effect of attentional focus feedback effect on volleyball serve performance and learning in 12-13 year old children. There were 3 groups (internal focus feedback, external focus feedback and preference feedback) and 3 acquisition days and 1 retention day. Subjects' performance during the experiment was analyzed in 2 blocks of 3 trials per day for the technique and in 2 blocks of 6 trials per day for the product measure.

A mixed ANOVA was conducted to determine effect of internal, external, and preference of attentional focus feedback on learning volleyball "tennis" serve. According to assumptions check for mixed ANOVA, the samples were drawn randomly from their respective populations so independent observation has not been violated.

In order to check the normality assumption of the dependent measure, Kolmogorov-Simirnov and Shapiro-Wilk tests were used. Results indicated that the normality assumption was not violated. Therefore, it can be said that volleyball "tennis" serve performance of the participants was distributed normally.

Dependent variables of the study (volleyball "tennis" serve performance of the participants) were measured on the ratio scale, so assumption of level of measurement has not been violated.

According to Box's M test, the homogeneity of population covariance matrices assumption has not been violated (Box's M = 48.408, $F_{(1,019)} = .437$, $p > .05$) Moreover, homogeneity of population covariance has not been violated according to Levene's test (Table 6).

Table 6: Levene's Test of Equality of Error Variances

	F	df1	df2	Sig.
1stAB	1,007	2	75	,370
2ndAB	,442	2	75	,645
3rdAB	,355	2	75	,702
4thAB	,263	2	75	,769
5thAB	,653	2	75	,523
6thAB	1,042	2	75	,358

At the beginning of the study, there were 90 participants. However, the reasons that can not be controlled had caused some participants to leave the experiment. Most of the participants who left the experiment were at the preference group, because the last day of the experiment was at the national holiday (April 23). Because of this reason, the experiment was completed with 78 participants (37 boys and 41 girls).

As it was mentioned before, the reliability of the observers was also analyzed before the *experiment*. For inter-observer agreement, the mean kappa value was 0.79 Also, intra-observer agreement the mean kappa for the first observer, was 0.81 and for the second observer was 0.77.

In process measure, there were 6 blocks in acquisition phase and 2 blocks in retention phase. In the acquisition phase, according to the means, the lowest score was in the first block (M = 8.455, SD = 1.906) and the highest score was in the last block (M = 12.321, SD = 2.779) (See Table 6). In the retention phase, the scores of the participants continued to increase first block (M = 12.981, SD = 3.383) to second block (M = 14.295, SD = 3.258). So there was an increase in performance of participants from first block to last block for all groups (See Table 7 and Table 9).

In product measure, there were 6 blocks in acquisition phase and 2 blocks for retention phase. In acquisition phase, the lowest score was in the first block (M = 4.153, SD = 4.702) and the highest score was at the 4th block (M = 5.282, SD = 5.567) (See Table 10). In retention phase, there was slight differences between first block (M =

5.628, *SD* = 5.948) and second block (*M* = 5.782, *SD* = 5.930). Thus, there was no a remarkable increase in performance for both 2 phase. (See Table 11 and 13).

4.1. Acquisition Phase for Process

To provide the learning of tennis serve and analyze the practice performance, 3 days acquisition phase was applied.

Subjects' performance during the experiment was analyzed in 2 blocks of 3 trials in per day. There were 6 blocks, which were named as AT1B1 (A=Acquisition, T=Technique, 1 = 1st Day, B1 = 1st Block), AT1B2 (A = Acquisition, T = Technique (Process)1 = 1st Day, B2 = 2nd Block), AT2B1 (A = Acquisition, T = Technique 2 = 2nd Day, B1 = 1st Block), AT2B2 (A = Acquisition, T = Technique 2 = 2nd Day, B2 = 2nd Block), AT3B1 (A = Acquisition, T = Technique 3 = 3rd Day, B1 = 1st Block), and AT3B2 A = Acquisition, T = Technique 3 = 3rd Day, B2 = 2nd Block).

All groups had the similar means at the first block. IFF group performed the highest score at the 4th block (*M* = 12.154, *SD* = 3.026). Its score decreased at the 5th block (*M* = 10.327, *SD* = 1.854) and then slightly increased at the last block (*M* = 11.846, *SD* = 2.781). So, it can be said that there was an inconsistency at the scores of IFF group in the acquisition phase. EFF group had a consistent increase in acquisition scores. It had the highest score at the last block (*M* =11.250, *SD* = 2.294). PF group also had a consistent increase in the acquisition scores. However, interesting point that it generally had slight decrease at the second blocks and increase at the first blocks of the acquisition days (For example, AT1B2 *M* =10.179, *SD* = 1.862 and AT2B1 *M* = 9.268, *SD* = 1.907). PF group had the highest score at the last block (*M* = 13.679, *SD* = 2.688) (See the Table 7).

Table 7: Descriptive Statistics for Process (Technique) Measurement in Acquisition Phase

Groups	*N*	*Mean*	*Std. Deviation*
AT1B1 Internal	26	8.231	2.277
External	24	8.479	1.850
Preference	28	8.643	1.597
Total	78	8.455	1.906
AT1B2 Internal	26	8.827	2.646
External	24	9.500	2.377
Preference	28	10.179	1.862
Total	78	9.519	2.344
AT2B1 Internal	26	10.615	2.290
External	24	9.458	2.211
Preference	28	9.268	1.907
Total	78	9.776	2.192
AT2B2 Internal	26	12.154	3.026
External	24	10.563	2.610
Preference	28	10.929	2.452
Total	78	11.224	2.752
AT3B1 Internal	26	10.327	1.854
External	24	10.333	1.692
Preference	28	10.768	1.984
Total	78	10.487	1.843
AT3B2 Internal	26	11.846	2.781
External	24	11.250	2.294
Preference	28	13.679	2.688
Total	78	12.321	2.779

The result of the 3 x 6 (Group x Trial Block) mixed design repeated measure ANOVA produced significant main effect for block, Wilk's Lambda = .188, F (5,375) = 77.082, $p < .05$, $\eta^2 = .812$ which is a large effect according to the Cohen (Cohen, 1988), the amount of 81 % variance accounted for block effect. Block x group interaction also produced significant effect, Wilk's Lambda = .479, F (10,375) = 8,026, $p < .05$, η^2 = .308 which is a large effect according to Cohen (Cohen, 1988) and the amount of variance 31 % variance accounted for the block x group effect. The results did not reveal significant main effect only for groups, F (2,75) = .744, $p > .05$. The results of repeated measure ANOVA were presented in Table 8.

Table 8: Mixed ANOVA for Process (Technique) Measurement in Acquisition Phase

Source of Variation	*SS*	*Df*	*MS*	*F*	*Sig of F*
		Between Subjects			
Groups	32.750	2	16.375	.744	.479
Error Between	1,650.80	75	22.011		
		Within Subjects			
Blocks	701.289	5	140.258	77.082	.001
Blocks by Groups	146.036	10	14.604	8.026	.001
Error Within	682.351	375	1.820		

Paired-samples *t*-test follow-up procedure indicated that most of the blocks had significant differences. Scores in the block of AT1B1 was significantly lower than scores in the block of AT1B2, AT2B1, AT2B2, AT3B1, and AT3B2. There was no found significant difference between the scores in the block of AT1B2 and the scores in the block of AT2B1. However, the scores of the AT1B2 were significantly lower than scores in the block of AT2B2, AT3B1, and AT3B2. Also, the block of AT2B1's scores was significantly lower than the scores of AT2B2, AT3B1, and AT3B3. The scores of AT2B2 were slightly higher than the scores of AT3B1. However, there was a statistically

significant difference between the scores of the AT2B2 and AT3B2. So, the scores in AT3B2 were higher than the scores in AT2B2. Finally, the scores in the blocks of AT3B1 significantly lower than the scores in the block of AT3B2 (See Paired Sample T-Test Table from Appendix G).

It was said before; there was block x group interaction in the acquisition phase for product measurement. All groups in AT1B1 block showed similar performance. In the AT1B2 block, IFF group showed slightly performance increase, EFF and PF groups' scores increased significantly. In the AT2B1 block the scores of the IFF group sharply increased. However, in the same block, the scores of the IFF group did not change and the scores of the PF group showed some decrease. In the AT2B2 block, the scores of the IFF group continued to significantly increase while the scores of EFF and PF group again started to increase. In the AT3B1 block all groups showed decrease in their performance. Especially IFF group's scores decreased sharply while the scores of EFF and PF decreased slightly. Finally in the AT3B2 block 3 groups had performance increase. IFF and EF groups had moderately significant performance increase, while PF group showed significantly performance increase (See Estimated Marginal Means of Measure Graph from Appendix H).

4.2. Retention Phase for Process

One week after the acquisition day 1, the retention test was performed. Retention test scores were analyzed in 2 blocks of 6 trials in a day. The blocks were named as RTB1 (R = Retention, T = Technique B1 = 1st Block) and RTB2(R = Retention, T = Technique, B2 = 2nd Block).

All groups had an increase form first block to last block. IFF group had the highest mean in both first (M = 15.019, SD = 3.360) and last block (M = 15.769, SD = 3.595). EFF group had lowest scores in first (M = 10.938, SD = 2.538) and last block (M = 12.354, SD = 2.534). PF group had the moderate scores in the first block (M = 12.839, SD = 2.994) and the last block (M = 14.589, SD = 2.741) (See Table 9).

Table 9: Descriptive Statistics for Process Measurement for Retention Phase

Group	*Number*	*Mean*	*Std. Deviation*
RTB1 Internal	26	15.019	3.360
External	24	10.938	2.538
Preference	28	12.839	2.994
Total	78	12.981	3.383
RTB2 Internal	26	15.769	3.595
External	24	12.354	2.534
Preference	28	14.589	2.701
Total	78	14.295	3.258

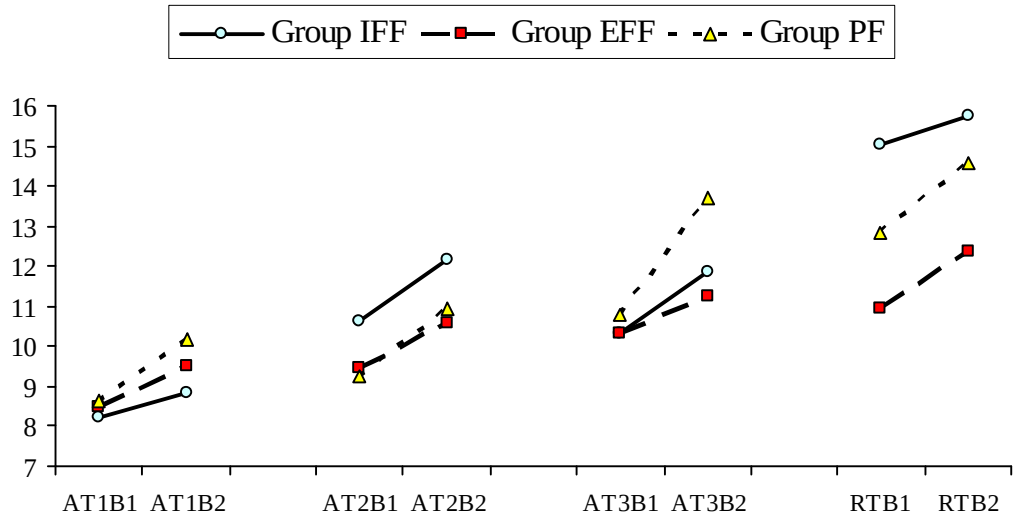

Figure 2: Graph of Process Measurement for Acquisition and Retention Phases

A 3 x 2 (Group x Block) mixed ANOVA with repeated measures revealed significant main effect for group ($F(2,75) = 10.541$, $p < .05$) and block (Wilk's Lambda = .578, $F(1,75) = 54.658$, $p < .05$, $\eta^2 = .422$ which is a large effect according to Cohen (Cohen, 1988) and the amount of 42 % variance accounted for block effect). According to follow up test (scheffe) IFF group was more successful, but it failed statistically

significance. IFF group was statistically more successful than EFF group. Also, PF group was statistically more successful than EFF group. The effect for groups by blocks interaction slightly failed statistical significance Wilk's Lambda = .929, *F* (2,75) = 2.857, p = .064 (See Table 9), η^2 = .071 which is a medium effect according to Cohen (Cohen, 1988) and the amount of 7 % variance accounted for the block x group effects. (See Table 10).

Table 10: Mixed ANOVA for Process Measurement in Retention Phase

Source of Variation	*SS*	*Df*	*MS*	*F*	*Sig of F*
		Between Subjects			
Groups	351.211	2	175.605	10.541	.001
Error Between	1249.451	75	16.659		
		Within Subjects			
Blocks	66.212	1	66.212	54.658	.001
Blocks by Groups	6.923	2	3.462	2.857	.064
Error Within	90.854	75	1.211		

4.3. Acquisition Phase for Product

The output of the tennis serve was analyzed with the technique. 3 rectangular lines were the target for the participants.

Subjects' performance during the experiment was analyzed in 2 blocks of 3 trials in per day. There were 6 blocks, which were named as, AP1B1 (A= Acquisition, P = Product, 1 = 1st Day, B1 =1st Block,) AP1B2(A= Acquisition, P = Product, 1 = 1st Day, B2 =2nd Block), AP2B1(A= Acquisition, P = Product, 2 = 2nd Day, B1 =1st Block), AP2B2(A= Acquisition, P = Product, 2 = 2nd Day, B2 =2nd Block), AP3B1 (A= Acquisition, P = Product, 3 = 3rd Day, B1 =1st Block), AP3B2 (A= Acquisition, P = Product,3 =3rd Day, B2 =2nd Block).

IFF group was performed the lowest score at the first block (*M* = 3, *SD* = 4.481) and highest score at the 4th block (*M* = 5.077, *SD* = 6.099). EFF group was performed the lowest score at the 5th block (*M* = 3.708, *SD* = 4.349) and highest score at the 4th block (M = 5.542, *SD* = 6.659). PF group had the lowest score at the 2nd block (*M* = 4.964, *SD* = 4.316) and the highest score at the 6th block (*M* = 6.286, *SD* = 5.925). So, it can be said that there was no consistent increase in participants' scores (See Table 11).

Table 11: Descriptive Statistics for Product Measurement in Acquisition Phase

Groups		*N*	*Mean*	*Std. Deviation*
AP1B1	Internal	26	3.000	4.481
	External	24	4.333	4.760
	Preference	28	5.071	4.791
	Total	78	4.154	4.702
AP1B2	Internal	26	3.192	4.118
	External	24	4.791	5.389
	Preference	28	4.964	4.316
	Total	78	4.320	4.622
AP2B1	Internal	26	4.885	5.588
	External	24	4.333	5.715
	Preference	28	5.392	5.094
	Total	78	4.897	5.402
AP2B2	Internal	26	5.077	6.099
	External	24	5.542	6.659
	Preference	28	5.250	4.351
	Total	78	5.282	5.657
AP3B1	Internal	26	4.192	4.940
	External	24	3.708	4.349
	Preference	28	5.571	5.138
	Total	78	4.538	4.844
AP3B2	Internal	26	4.346	5.106
	External	24	4.500	5.234
	Preference	28	6.286	5.925
	Total	78	5.090	5.456

The result of the 3 x 6 (Group x Trial Block) mixed ANOVA did not produce significant main effect for block, Wilk's Lambda = .889, *F* (5,375) = 1,96, p = .084, η^2 = .111 which is a moderate effect according to Cohen (Cohen, 1988) and the amount of 11 % variance accounted for the block effect. Block x group interaction also did not produce significant main effect, Wilk's Lambda = 870, *F* (10,375) = 1.175, p = .376, η^2 = .067 which is a small effect according to Cohen (Cohen, 1988) and the amount of 6,7 % variance accounted for the block x group effect Moreover, the results did not reveal significant main effects for groups, *F* (2,75) = .608, p = .547 (See Table 12).

Table 12: Mixed ANOVA for Product Measurement in Acquisition Phase

Source of Variation	*SS*	*Df*	*MS*	*F*	*Sig of F*
		Between Subjects			
Groups	144.889	2	72.444	.608	.547
Error Between	8931.410	75	119.085		
		Within Subjects			
Blocks	78.069	5	15.614	1.96	.084
Blocks by Groups	93.658	10	9.366	1.175	.306
Error Within	2987.914	375	7.968		

4.4. Retention Phase for Product

One week after the acquisition day 1, the retention day was performed. Retention day scores were analyzed in 2 blocks of 6 trials in a day. The blocks were named as RPB1 (R = Retention, P = Product, B1 = 1st Block) and RPB2 (R = Retention, P = Product, B2 = 2nd Block).

All groups have similar means at the first block. IFF group had slightly decrease in performance from the first block (*M* = 5.654, SD = 6.499) to the second block (*M* = 5.038, SD = 6.213) Also EFF group performed better at the first block (*M* = 5.917, SD

= 6.520) than at the second block (*M* = 5.083, SD = 5.174). Only PFF group had an increase in performance from the first block (*M* = 5.357, SD = 5.042) to the second block (*M* = 7.071, SD = 6.248) (See Table 13)

Table 13: Descriptive Statistics for Product Measurement in Retention Phase

Group	*Number*	*Mean*	*Std. Deviation*
RPB1 Internal	26	5.654	6.499
External	24	5.917	6.520
Preference	28	5.357	5.042
Total	78	5.628	5.948
RPB2 Internal	26	5.038	6.213
External	24	5.083	5.174
Preference	28	7.071	6.248
Total	78	5.782	5.930

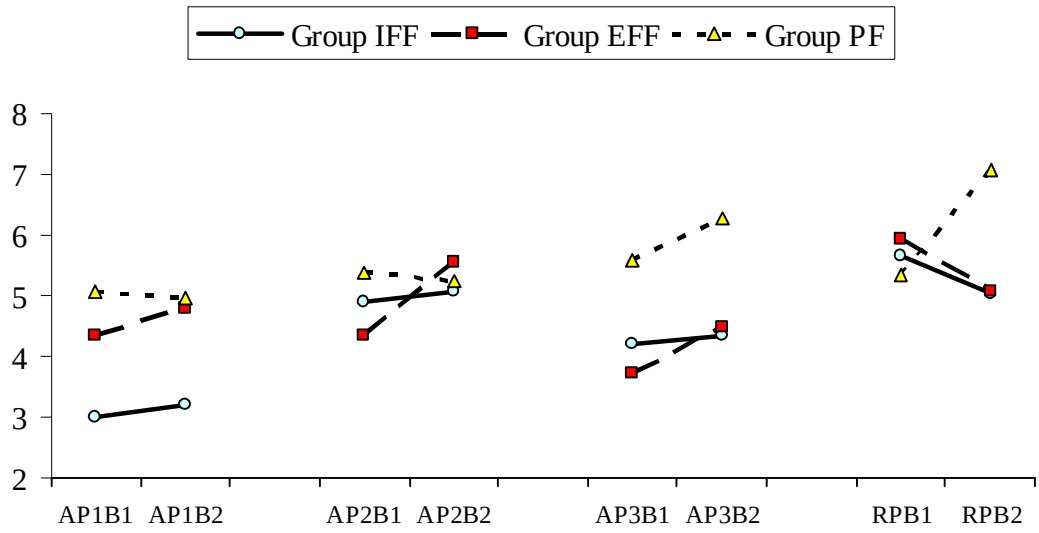

Figure 3: Graph of Product Measure in Acquisition and Retention Phases

A 3 x 2 (Group x Block) repeated ANOVA measures did not reveal significant main effect for group (F (2,75) = .191, p = .827) and block (Wilk's Lambda = 1, F (1,75) = .029, p = .865). The main effect for groups by blocks interaction slightly failed statistical significance (See Table14), Wilk's Lambda = .936, F(2,75) = 2.569, p = .083

(See Table 13), η^2 = 0.64 which is a moderate effect according to Cohen (Cohen, 1988) and the amount of 6,4 % variance accounted for block x group effect.

Table 14

Mixed ANOVA for Product Measure in Retention Phase

Source of Variation	*SS*	*Df*	*MS*	*F*	*Sig of F*
		Between Subjects			
Groups	23.238	2	11.619	.191	.827
Error Between	1249.451	75	16.659		
		Within Subjects			
Blocks	.304	1	.304	.029	.865
Blocks by Groups	53.476	2	26.738	2.569	.083
Error Within	4574.198	75	60.989		

CHAPTER 5

DISCUSSION

This study examined the effects of internal focus feedback, external focus feedback and preference of these feedbacks on skill learning. In order to evaluate the performance between the experimental groups both the acquisition and retention phases of the experiment were analyzed separately. The acquisition phase provides information on the effects of the experimental variable on the rate of performance improvement. However, successful performance in the acquisition phase does not guarantee successful performance in retention phase. The retention phase of a motor learning experiment is true measure of learning (Hogan, 1999). So, first of all results of the acquisition phase and then result of the retention phases will be discussed in line with the relevant literature.

The first hypothesis of experiment was that there was no statistically significant difference between internal focus feedback group, external focus feedback group and preference feedback group in their process measures in acquisition and retention phases. The results of the study partially supported the first hypothesis because there was no statistically significant difference in acquisition phase whereas there was statistically significance difference in retention phase.

In order to determine the effects of attentional focus feedback on skill learning, all participants completed three acquisition days. During this phase, attentional focus feedbacks were given to the all participants. As it was mentioned above, part "a" of the first hypothesis was supported by the results of the current study. The finding of this research was that there was no significant difference in performance between external and internal focus of attentional focus feedback groups in acquisition phase. This shows an agreement with some of the previous researches, whereas it is contradictory to the many other research findings. There are few studies that support the results of the

current study (Shea & Wulf, 1999; Wulf, McNevin, Fuchs Ritter & Toole, 2000; Wulf, Shea & Park, 2001; McNevin, Shea & Wulf, 2003; Nelson, 2005). One of them was the study of Wulf, McNevin, Fuchs, Ritter and Toole (2000). They followed up on the use of attentional strategies to enhance motor performance and learning. They did two experiments. The purpose of the first experiment was to determine whether there are advantages of an external attentional focus related to the effects of one's movements relative to an external focus that is not effects related. Two groups of participants hit tennis balls as a target with one group focusing on the ball coming toward them (antecedent) and the other group focusing on the ball leaving the racket. The results showed that during the practice there were no differences between the groups that focused on the antecedent (oncoming ball) or effects of their actions (ball leaving the performer's racket). A similar result was found in Nelson's study (2005). He tried to investigate the effects of an external and an internal focus of attention on the performance, learning and a transfer of a complex open motor skill performed in a field setting. The participants completed a turning maneuver on a mountain bike. The results of his study indicated that there were no performance differences between groups. However, as it was mentioned before there were some studies which have opposing results (Wulf, HöB & Prinz, 1998; Maddox, Wulf & Wright, 1999; Wulf, Lauterbach &Toole, 1999; Wulf, McNevin, and Shea, 2001; Wulf, McConnel, Gartner & Schwardz, 2002; Totsika, & Wulf, 2003; Wulf, Weigelt., Poulter & McNevin, 2003; Wulf & McNevin, 2003; Zachry, Wulf, Mercer & Bezodis, 2005). For example, Wulf, Lauterbach and Toole (1999) examined the effects of external and internal focus to determine in field like conditions. The participants had no experience about golf and they were 22 right-handed students (9 women and 13 men). The external focus group directed their attention to golf club movement and the internal focus group directed their attention to the arm movement performed practice and retention phases. The external focus group showed better performance than the internal focus group in both practice and retention phases.

In order to determine the effects of attentional focus feedback on skill learning, all participants completed a retention test one week after acquisition day 1. During this phase, no attentional focus feedbacks were provided for all participants. The results of the present study did not provide support for the part "b" of the first hypothesis. It was found that there was a statistically significant difference between attentional focus groups in retention phase. Contradictory to the results of retention phase in this study, it was indicated that the internal focus group was more successful than the external focus feedback group in process; many studies investigating the external focus had more positive effects on learning a skill than the internal focus in both acquisition (Wulf, HöB, & Prinz, 1998) and retention phases (Wulf, Lauterbach & Toole, 1999). Also, Maddox et. al. (1999) found that external focus group demonstrated greater accuracy in tennis backhand shots than the internal focus group in practice, retention and transfer phases.

It was mentioned before, in this study, **process measures** showed that there were significant differences between three groups. However, Maddox et. al. (1999) showed that the advantages of external focus were not seen in movement technique like movement form. External and internal focus groups were similar in the quality of movement technique.

The **second hypothesis** of the experiment is that there was no significant difference between internal focus feedback group, external focus feedback group and preference feedback group in their target measures in acquisition phase and retention phase. The results of the study supported the second hypothesis that there was no significant difference between three attentional focus groups in their product measure in acquisition and retention phases.

In order to determine the effects of attentional focus feedback on targeting, all participants completed three acquisition days. As it was mentioned, part "a" of the second hypothesis was supported by the results of the current study, because there were no significant differences between internal and external focus feedback groups in their

target measurement in acquisition phase. However, in a similar study, the different results were found about the effects internal and external focus in product measurement. Wulf, McConnel, Gartner & Schwarz (2002) tried to examine how the effectiveness of feedback for learning of complex motor skills is affected by the focus of attention it persuades. In their study, there were two experiments. In both experiments, two different feedback types referred specifically to body movements (internal focus) and to movement effects (external focus). Experiment 1 tried to examine the generalizability of the benefits of external as compared with internal focus feedback and wanted to determine whether the internal or external focus feedback would differentially affect learning as a function of performer's expertise. Participants were groups of novices and advanced volleyball players who practiced "tennis" serves in volleyball. The results showed that external focus feedback had a beneficial effect on movement form, at least when it was provided during practice

In order to determine the effects of attentional focus feedback on targeting, all participants completed a retention test one week after acquisition day. The results of the present study provided support for the part "b" of the second hypothesis, because there were no significant differences between internal and external focus feedback groups in their target measurement in retention phase. This result was similar with study of Wulf, McConnel, Gartner & Schwarz (2002). In contrast to practice, they found that there were no clear group differences on the retention test without feedback.

In the current study, there were no significant performance increases in product measurement like results of Wulf, McConnel, Gartner & Schwarz's study (2002). Although in this study targeting performances of the participants were measured, the main focus of the participants was on the quality of the performance not on the accuracy to the target. In addition, participants were given feedback about their movement form and were expected to attend that information but they were not given specific feedback on how to perform better on targeting accuracy. So, the comparison of the groups in targeting performance may not a true comparison being affected by the different types of

the attentional feedback but rather a by product of their practice and may be other factors like increase of strength, difference in height etc. For example, internal focus feedback was given by such terms "Toss the ball high enough in front of the hitting arm". This type of terms could not be used for targeting. When score of the participant's hitting was given as a feedback, it would neither internal nor external focus feedback. So there was no augmented feedback about target score. The participants could learn their scores by just looking at the hitting line of the ball. Targeting accuracy was an intrinsic feedback for them and possibly a motivator for later trials.

There were some unique aspects of this study that warrants some further analysis and comparison with current literature. These aspects might be listed as expertise level of the participants, opportunity for the selection of the attentional focus, the amount of practice for the acquisition phase, age of the participants, the provision of the amount of feedback, the complexity of the skill and the learning environment.

When **expertise level** is regarded, the different results have existed in attentional focus area. For example, Wulf, Landers, Mercer, & Töllner (2004) could not found significant differences between internal and external focus groups when they compared expert and non-expert participants. Also, Poolten, Maxwell, Masters & Raab (2005) failed to reproduce external focus benefits using a golf putting skill. Attention in their experiment was used towards internal movements made by the individuals (internal group) or the movement's effect (external group). No differences were found between groups during both learning and retention. Differences between the two focus conditions only became apparent when a secondary task load was introduced, with negative performance effects clear in the internal focus group. Some studies found that internal focus resulted more performance improvements than external focus (Wulf, McConnel, Gartner & Schwardz, 2002; Perkins-Ceccato, Passmore, & Lee, 2003). In the study of Wulf, McConnel, Gartner & Schwardz (2002), the removal of the internal-focus feedback in retention appeared to result in performance improvements for novices (more so than for advanced players). Moreover, in the study of Perkins-Ceccato,

Passmore, & Lee (2003), highly skilled golfers showed better performance under external focus condition, on the other hand, low skilled golfers showed better performance under internal focus condition. In the current study internal focus feedback group showed better performance than external focus feedback group in specifically retention phase. The reason of this finding might be due to the level of the participants being as novice.

Preference of the attentional focus type was another dimension of this study like of a few studies (Wulf, Shea & Park, 2001; Ehrlenspiel, Lieske, & Rübner, 2004). Whether a person is given a chance to prefer attentional focus instruction, performance of him or her may have been affected positively. In this study, rather than assigning participants to different groups and prescribing what they were to concentrate on during practice, participants were allowed to try both strategies for themselves. Based on their preferred attentional focus, the performances of participants who chose an internal or an external focus were respectively examined.

To assess the influence of feedback on the learning sport skills, in the present experiment the feedback itself and the attentional focus that it induced were manipulated. So, instead of participants being informed about the type of attentional feedback as in internal or external focus group, in this experiment **preference** group were given chance to choose internal or external focus of feedback about the skill during practice days. In results of the study of Wulf et. al in 2001., the participants who preferred external focus showed better balance performance, whereas in the present study external and internal focus feedbacks of the preference group were not compared. The reason for this was the failure of the 11 participants not returning to the last day of the experiment. At the first day of the experiment there were 39 participants whereas at the fourth day of experiment there were 28 of them. So there were no enough participants to make comparison between internal and external focus feedback conditions in the preference group.

In this study, there were 3 practice days. Each practice day included 12 trials. It is natural concern that **how much practice is necessary** for a skill to be learned. Much depends on the criterion for skill attainment. For example, when learning foul shot in basketball, it can be enough to score three, four or five out of five shots. In the psychological literature, criterion of a success is usually one perfect trial or match (Singer, 1980). Therefore, the question of how much practice is necessary, is a difficult one that can be made only after deciding on aim of practice. At the beginning of the study it was thought that there would be an increase in performance from 1st practice day to 3rd practice day. The results of the study indicated that all three groups attained a higher level of proficiency at the 3rd day. So, this performance increase was enough for the aim of this experiment.It was mentioned before; a similar study was done by Wulf, Shea and Park (2001). In their first experiment, they applied two acquisition days and one retention day for balancing task, whereas in this study, there were **more practice days** to learn the volleyball serve. In practice Day 1 of the study of Wulf et. al.'s (2001), participants were instructed to focus as an internal in trial 1, the external in trial 2, and so on until 8 trials. In practice Day 2, participants focused on their preferred type of attentional focus. Participants received no further instructions or reminders on Day 3 that was retention day. First, at the end of the Day 1, about equal number of participants chose an internal and external focus as the more effective attentional focus strategy. Also, there were no significant differences between preferred internal and external focus of attention on the Day 2. In the current study, 13 participants chose external focus feedback and 15 participants chose internal focus feedback in Day 2. When participants were asked whether to change their preference or to continue their preferred attentional focus feedback in Day 3, 12 participants preferred external focus feedback, 16 participants external focus feedback. In this point, it can be said that there was a similarity between Wulf, Shea and Park's study and current study. Because, about equal number of participants chose internal and external attentional strategy in the current study, too.

Age is another important factor when learning a motor skill. Different teaching methods or approaches might be required for various age levels. In most of the motor behavior studies, the participants are usually adolescence and adults like in the study of Wulf, Shea and Park (2001), whereas in the present study the participants were children at the age of 12-13 years. Age differences were usually found in standard tests, which require reaction to a signal or informational section, which is presented together with highly significant competing inputs. These tasks are termed interference tasks. Detailed analyses of experimental researches show that age differences become small, when participants know exactly where to focus his or her attention (Kallus, Schmitt & Benton, 2005). In the current study, as the participants were novice and children as well, they might not have the capability to know exactly how to focus and use attentional information. Moreover, preference group might have further difficulties because they needed to analyze their own needs and understand the task and skill to choose (prefer) among two different focus of attention because the focus of feedback was not signified by trainers.

There were some difficulties because of the children's' **age**. One of the problems was the appropriateness of the equipments. For example, the height of the net and the distance of the serving line were not suitable for the children. Most of them could not strike the ball over the net. So, to overcome this problem, the height of the net was reduced to 2.00 meters and serving line was shortened to 5 meters (about 4 meters to the net). Another problem was associated with the understanding of the internal and external attentional focus feedbacks and the preference of them. It was observed during the experimentation that to understand the meaning of internal focus and external focus feedback was very difficult for children of 12-13 years of age. The participants were given examples for both internal focus and external focus feedback so to prefer the attentional focus feedbacks were made easier for them.

The finding that one can enhance the effectiveness of **feedback** by directing performer's attention away from their body movements not only has practical

implications for the training of motor skills, it also has theoretical implications. The current predominant view with this respect to the role of feedback in motor learning is that feedback manipulations are most effective if they enhance the learners' awareness of their body movements (as cited in Wulf, McConnel & Schwarz, 2002). Furthermore, the findings of numerous recent studies have been interpreted as evidence for the notion that giving learners a chance to attend to their movements, for example, by providing feedback only a portion of trials as compared with every trial, makes learning more effective (e.g., Wulf & Schmidt, 1989; Wulf, Schmidt & Deubel, 1993; Wrisberg & Wulf, 1997). Therefore, in present study, feedback was used after every two trials.

The studies on internal and external focus of attention, has advocated the benefits of external focus for **high complex skills**, requiring multiple body segment coordination. For example in Wulf, Lauterbach, & Toole's (1999) study golf swing requiring multiple body segment coordination skill was used. But in many motor behaviour studies a simple skill with simple task has been performed in laboratory settings. The tasks used generally included simple skills which were not required multiple body segment coordination (Wulf, HöB., & Prinz, 1998; McNevin, Wulf, & Carlson, 2000; Wulf, Shea, & Park, 2001; Wulf, McNevin, & Shea, 2001; McNevin, Shea &Wulf, 2003; Wulf, & McNevin, 2003; Totsika, & Wulf, 2003; Wulf, Weigelt, Poulter, & McNevin, 2003; Zachry, Wulf, Mercer, & Bezodis, 2005). Contradictory with the many studies, this experiment was performed in the field like conditions with a complex skill requiring coordination with the ball, the body, two hands, and legs to perform the volleyball serve.

The purpose of this study was to investigate the effects of internal and external focus feedback and preference of these feedbacks in skill learning on 12-13 years old children. To learn the skill, the three acquisition days were given as practice and to measure the learning level one retention day was applied. According to the results of current study, for the process measurement, the preference feedback group performed better in acquisition and retention phases than external focus feedback group. Also

internal focus feedback group showed better performance than external focus feedback group again in acquisition and retention phases as different from many other previous studies. The reason of this might be attributed to few factors as; level of performance which was novice, and the age of the participants which was young children.his study can be useful for practitioners working with children such as physical education teachers and coaches, especially volleyball coaches. During teaching a skill, they can determine the attentional focus feedback type according to the current study. So they can prefer internal focus feedback to external focus feedback for novices especially in technique teaching. On the other hand, the important inferences could not be found from the product measurements. The results did not revealed significant group differences.

The results of the study provide beneficial information about effects of attentional focus feedbacks on skill learning. However, the comparison of preferred internal and external focus feedbacks could not be managed, because there weren't enough participants in preference group compared to the internal and external focus feedback groups. For the future studies, if more participants are provided for the preference group, this comparison would be plausible. Moreover, gender differences and age differences in the internal-external and preference were not examined in the current study. Further studies are necessary to understand how learning environment should be manipulated to maximize the learning different motor skills under various conditions, ages with the provision of giving some of the decision to the learner so that they can be a part of their learning process not just a being to be manipulated. Also, at the beginning of the current study, the participants were selected according to only their experience level and age. Further studies should also select the participants according to their height and weight level.

REFERENCES

Agruss, C. D., Williams K. R. & Fathallah F. A. (2004). The effect of feedback training on lumbosacral compression during simulated occupational lifting. *Ergonomics. 47(10)*, 1103-1115.

Anderson, D. I., Magill, R. A., Sekiya H. & Ryan G. (2005). Support for an Explanation of the Guidance Effect in Motor Skill Learning. *Journal of Motor Behavior. 37(3)*, 231-238

Anderson, J. R. (1995). *Cognitive Psychology and its Implications.* (4th ed.). United States of America. W. H. Freeman and Company.

Calming the mind so the body can perform. (2007). http://209.85.135.104/search?q=cache:fu9JC4FL7cMJ:www.earnforex.com/forex_ebooks/trading_psychology/Calming_The_Mind.pdf+Calming+the+mind+so+the+body+can+perform&hl=tr&ct=clnk&cd=1&gl=tr , Accessed 1 August, 2007.

Cohen, J. (1988). *Statistical Power analysis for the behavioral sciences.* Hillsdale, NJ: Erlbaum.

Coker, C. A. (2004). *Motor Learning and Control for Practitioners.* New York. McGraw-Hill Companies, Inc.

Dearing, J. (2003). *Volleyball Fundamentals: a better way to learn the basics.* United States. Human Kinetics Publishers, Inc.

Ehrlenspiel, F., Lieske, J., & Rübner, A. (2004). Interaction between preference and instructions for a focus of attention in billards. *Perceptual and Motor Skills*, *99*, 127-130.

Enhanced-Performance (2007). http://www.enhanced-performance.ca/articles/article10.pdf., Accessed 1 August, 2007.

Hogan, W., F. (1999, 2001). *The Effects of Instructional Focus on the Learning of a Simple Targeting Task.* Published Master Thesis, University of New Brunswick, Canada.

Johnson, A., & Proctor, A., W. (2004). *Attention: Theory and Practice.* (pp.4-93) United States of America. Sage Publications, Inc.

Kahneman, D. (1973). *Attention and Effort.* United States of America. Prentice-Hall Inc.

Kail, R., & Park, Y. (1990). Impact of Practice on Speed of cognitive process. *Experimental Child Psychology, 49*, 227-244.

Kallus, K. W., Schmitt J., A., J. & Benton, D. (2005). Attention Psychomotor Functions and Age. *Eur. J. Nut.* 44

Kinesiology, School of Applied Science (2007). http://kinesiology.unlv.edu/wulf/ Exernalfocusattention.pdf. Accessed 1 August, 2007.

Kluka, D. A.(1992). *Necessities of the Game, Serves.Volleyball* (2nd). United States of America. Wm. C. Brown Publishers.

Kluka, D. A. (1999) *Motor Behavior from Learning to Performance*. United States of America, Morton Publishing Company.

Maddox, M. D., Wulf, G., & Wright, D.L. (1999). The effect of an internal versus external focus of attention on learning of a tennis stroke. *Journal of Exercise Psychology*, *21*, S78.

Magill, R. A. (2001b). *Motor learning: concepts and applications.* (6th ed.). New York. McGraw Hill.

Magill, R. A. (2004). *Motor learning and control: concepts and applications.* (7th ed.). Boston. McGraw Hill.

McNevin, N. H., Shea C. H., & Wulf G. (2003). Increasing the distance of an external focus of attention enhances learning. *Psychological Research*, *67*, 22-29.

Nelson, M. A. (2005). *The effects of external and internal focus of attention on the performance and learning of turning on a mountain bike*. Published Master Thesis. The faculty of California State University, Fullerton.

Neville, W., J. (1990). *Coaching Volleyball Successfully*. United States of America. Leisure Press.

Parsons R. D., Hinson, S. L., & Brown, S. D. (2001). *Educational Psychology: a practitioner- researcher model of teaching*. Canada. Wadsworth, a division of Thomson Learning, Inc.

Perkins-Ceccato, N., Passmore, S. R., &Lee, T. D. (2003). Effects of focus of attention depend on golfers' skill. *Journal of Sports Sciences*, *21*, 593-600.

Poolton J. M., Maxwell J. P., Masters R. S. W., & Raab (2006). Benefits of an external focus of attention: Common coding or conscious processing? *Journal of Sport Science, 24 (1)*, 89-99.

Proctor, R. W., & Dutta A. (1995). Skill *Acquisition and Human Performance*. United States of America. Sage Publications, Inc.

Reo & Allen J., (2004) Effects of Live, Videotaped, or Written Instruction on Learning an Upper-Extremity Exercise Program. *Physical Therapy, 84(8)*, 622-633.

Schmidt R. A., & Lee, T. D. (1999). *Motor control and learning: a behavioral emphasis* (3rd). Human Kinetics, Campaign, IL.

Schmidt, R., A. & Wrisberg C., A. (2004). *Motor Learning and Performance; A problem Based Approach.* (3rd. ed.) United States of America. Human Kinetics.

Selective Attention. (2007). http://micro5.mscc.huji.ac.il/~acohenlab/files/ency_final.pdf , Accessed 1 August, 2007.

Shea, C., & Wulf, G. (1999). *Enhancing motor learning through external focus instructions and feedback*. Human Movement Science, 18, 553-571.

Singer, R. N. (1980). *Motor Learning and Human performance: an application to motor skills and movement behaviors* (3rd ed.). United States of America, Macmillan Publishing Co., Inc.

Stenberg. R. J. & Pretz J. E. (2005). *Cognition and Intelligence: identifying mechanism of the mind.* United States of America. Cambridge University Press.

Totsika, V., & Wulf, G. (2003). The influence of external and internal foci of attention on transfer to novel situations and skills. *Research Quarterly for Exercise and Sports*, *74*, 220-225.

University of Nevada, Las Vegas (2007). http://kinesiology.unlv.edu/wulf/focus-attention.html, Accessed 31 July, 2007.

Winstein, C. J., & Schmidt, R. A. (1990).Reduced frequency of knowledge of results enhances motor skill learning. *Journal of Experimental Psychology: Learning, Memory, and Cognition, 16*, 677-691.

Wirth, C. K. (2004). *Influence of Attentional and Motivational Factors on the Performance of a Mastered Motor Task.* Published Master Thesis, University of Florida, Florida, United States.

Wrisberg, C., A. & Wulf, G. (1997). Diminishing the effects of Reduced Frequency of Knowledge of Results on Generalized Motor Program Learning. *Journal of Motor Behavior. 29 (1)*, 17-26.

Wulf G., McNevin, N. H., & Shea C. (2001). The automaticity of complex motor skill learning as a function of attentional focus. *The Quarterly Journal of Experimental Psychology*, *54A (4)*, 1143-1154.

Wulf, G., & McNevin, N.H. (2003). Simply distracting learners is not enough: more evidence for the learning benefits of an external focus of attention. *European Journal of Sport Science, 3 (5)*, 1-13.

Wulf, G., & Schmidt, R., A. (1989). The learning of Generalized Motor Programs: Reducing the Relative Frequency of Knowledge of Results Enhances Memory. *Journal of Experimental Psychology: Learning, Memory and Cognition. 15 (4)*, 748-757.

Wulf, G., HöB, M., & Prinz, W. (1998). Instructions for motor learning: Differential effects of internal versus external focus of attention. *Journal of Motor Behavior*, *30*, 169-179.

Wulf, G., Lauterbach, B., &Toole, T. (1999). Learning advantages of external focus of attention in golf. *Research Quarterly for Exercise and Sport*, *70*, 120-126.

Wulf, G., McNevin, N. H., Fuchs, T., Ritter, F., & Toole. T. (2000). Attentional focus in complex motor skill learning. *Research Quarterly for Exercise and Sport*, *71*, 229-239.

Wulf, G., Schmidt, R., A. & Deubel, H. (1993). Reduced Feedback Frequency Enhances Generalized Motor Program Learning but Not Parameterization Learning. *Journal of Experimental Psychology: Learning, Memory and Cognition. 19(5),* 1134-1150.

Wulf, G., Shea, C., & Park J-H. (2001). Attention and motor performance: preferences for and advantages of an External Focus. *Research Quarterly for Exercise and Sport*, *72*, 335-344.

Wulf, G., Weigelt, M., Poulter, D., & McNevin, N. (2003). Attentional focus on suprapostural task affects balance learning. *The Quarterly Journal of Experimental Psychology*, *56A (7)*, 1191-1211.

Young, D. E., & Schmidt, R. A. (1992). Augmented kinematic feedback for motor learning. *Journal of Motor Behavior, 24,* 261-273.

Zachry, T., Wulf, G., Mercer, J., & Bezodis, N. (2005). Increased movement accuracy and reduced EMG activity as the result of adopting an external focus of attention. *Brain Research Bulletin*, *67*, 304-309.

APPENDICES

APPENDIX A

Aim of the Study for the Participants

This is scientific experiment which is organized for my master thesis. In this experiment we will learn the tennis service in volleyball. The experiment will cover 4 days of 8 days. First three days are Saturday, Tuesday, Wednesday and last day is the Saturday which is the one week after the first day of the experiment.

As I said before we will try to learn tennis serve in volleyball. You will perform 12 trials in each day. During the trials, volleyball coaches will give you some feedback about your performance. You should listen carefully to these feedbacks and regulate your movements according to them. Also you will hit the ball above the net to the three rectangular lines. Each line has the different length. So when you hit the ball to the different lines, you will gain different points. The smallest rectangular will have had gained the highest point and out of the three rectangular will have had gained 1 point and out of the volleyball lines and hitting the net will have not gained any point.

APPENDIX B

Instruction of the Skill for Participants

The serve initiates the play, is the only skill completely within the control of an individual player. There are different serving types. We will learn tennis serve (the overhand float serve) in volleyball.

The server should take a position behind the line. Thee feet are in a staggered position; the toes, hips, and shoulders face the direction the ball is to travel. The foot opposite the hitting hand is placed ahead of the other (Kluka, 1992). The front leg should be flexed with the toe pointing toward target. Most the body weight is on the back leg (Neville, 1990). The tossing arm is flexed at the elbow, with the ball resting on a base made by fingers and thumb, at shoulder level. The hitting hand is placed on the top of the ball, arm fully extended. The ball is tossed by lifting the arm up toward the upper limit in front of the hitting shoulder. As the toss occurs, the lifting hand remains in contact with the ball as long as is comfortable. At the height of the toss, the weight transferred from back to the front foot. At the contact, the ball is hit with the heel and palm of the hand. The wrist is rigid, and the ball is hit through its midline; the arm is fully extended (Kluka, 1992). The force of the serve is directed through the ball to the target by allowing the arm to follow through (Neville, 1990).

APPENDIX C

Criteria for Movement Form Evaluation

1. Does the participant adopt the correct stance?
2. Does the participant Show a sufficient backswing with a high elbow?
3. Does he or she begin with forward motion of the hitting arm by rotating the trunk forward?
4. Does he or she accelerate the lower arm until hitting the ball?
5. Is the weight shift recognizable?
6. Is the arch of the back released quickly and forcefully?
7. Is a hip flexion visible?
8. Is the ball being hit with the open hand and with a wrist snap so that it receives a forward rotation?

APPENDIX D

Feedback Statements for the Internal, External Focus Feedback and Preference Groups

Internal Focus Feedback

1. Toss the ball high enough in front of the hitting arm.
2. Snap your wrist while hitting the ball to produce a forward rotation of the ball.
3. Shortly before hitting the ball, shift your weight from the back leg to the front leg.
4. Arch your back and accelerate first the shoulder, then the upper arm, the lower arm, and finally your hand.

External Focus Feedback

1. Toss the ball straight up.
2. Imagine holding a bowl in your hand and cupping the ball with it to produce a forward rotation of the ball.
3. Shortly before hitting the ball, shift your weight toward the target.
4. Hit the ball as if using whip, like a horseman driving horses.

APPENDIX E

Permission Form

Mart 2007

Sayın Veli,

Orta Doğu Teknik Üniversitesi beden eğitimi bölümünde yüksek lisans eğitimi görmekteyim. Yüksek lisans tezim kapsamında, öğrencilerime voleybolda servis atma becerisini bir takım geri bildirim tekniklerini kullanarak öğretmeye çalışacak ve elde edilen sonuçları analiz edeceğim.

Oğlunuzun / kızınızın …….tarihinde yaklaşık 1 (bir) saat sürecek olan bu bilimsel çalışmaya katılmasına izin veriyorsanız aşağıya imza atmanızı rica ederim

Saygılar

Duygu AYAN
Hafize ÖZAL İlköğretim Okulu
Beden Eğitimi Öğretmeni

Velinin Adı Soyadı :

Velinin İmzası :

APPENDIX F

Data Coding Sheet

HAREKETLERİN KRİTERLERİNE UYMA TABLOSU

Katılımcının Adı ve Soyadı: **Numarası:** **Grubu: I F**

Deneme Sayıları → **Kriterler** ↓	2	4	6	8	10	12	TOPLAM PUAN
1. Katılımcı doğru duruşu benimsemiş mi?							
2. Katılımcı dirseğini kaldırarak yeterli derecede sırtını yay pozisyonuna getirebiliyor mu?							
3. Katılımcı harekete vücudunu öne çevirerek kolun öne hareketi ile başlıyor mu?							
4. Katılımcı topa vurmadan önce alt kolunu hızlandırabiliyor mu?							
5. Vücudun ağırlığının kaydırılması fark edilebilir ölçüde mi?							
6. Sırttaki yay pozisyonu hızlı ve güçlü bir şekilde topa aktarabiliyor mu?							
7. Kalçada ki esneme gözlemleniyor mu?							
8. Topun öne doğru dönmesini sağlamak için topa açık elle vurulup bilek kapatılıyor mu?							
DENEMELERİN TOPLAM PUANI							

Açıklama: Toplamda 20 deneme yapılacak olan çalışmada 2., 4., 6., 8., 10., 12. denemelerde doğru yapılan kriterlerin karşısına, "*" i aretini yazınız. Hareketler kriterleri karşılamıyorsa boş bırakınız.

APPENDIX G

Paired Sample T-Test Table

	Paired Differences				
	Mean	Std. Deviation	Std. Error Mean	t	Sig. (2-tailed)
AT1B1 - AT1B2	-1,064	1,3731	,1555	-6,844	,000
AT1B1 - AT2B1	-1,321	1,8481	,2093	-6,311	,000
AT1B1 - AT2B2	-2,769	2,0885	,2365	-11,711	,000
AT1B1 - AT3B1	-2,032	1,6794	,1902	-10,686	,000
AT1B1 - AT3B2	-3,865	2,1960	,2487	-15,545	,000
AT1B2 - AT2B1	-,256	2,4225	,2743	-,935	,353
AT1B2 - AT2B2	-1,705	2,3596	,2672	-6,382	,000
AT1B2 - AT3B1	-,968	2,1325	,2415	-4,009	,000
AT1B2 - AT3B2	-2,801	2,3718	,2686	-10,431	,000
AT2B1 - AT2B2	-1,449	1,7555	,1988	-7,288	,000
AT2B1 - AT3B1	-,712	1,7956	,2033	-3,500	,001
AT2B1 - AT3B2	-2,545	2,3812	,2696	-9,439	,000
AT2B2 - AT3B1	,737	2,2064	,2498	2,951	,004
AT2B2 - AT3B2	-1,096	2,2977	,2602	-4,213	,000
AT3B1 - AT3B2	-1,833	1,8737	,2122	-8,641	,000

APPENDIX H

Estimated Marginal Means of Measure